GUHL UND SCHEIBLER

COLLAMAT 8510/20

TECHNICAL HANDBOOK

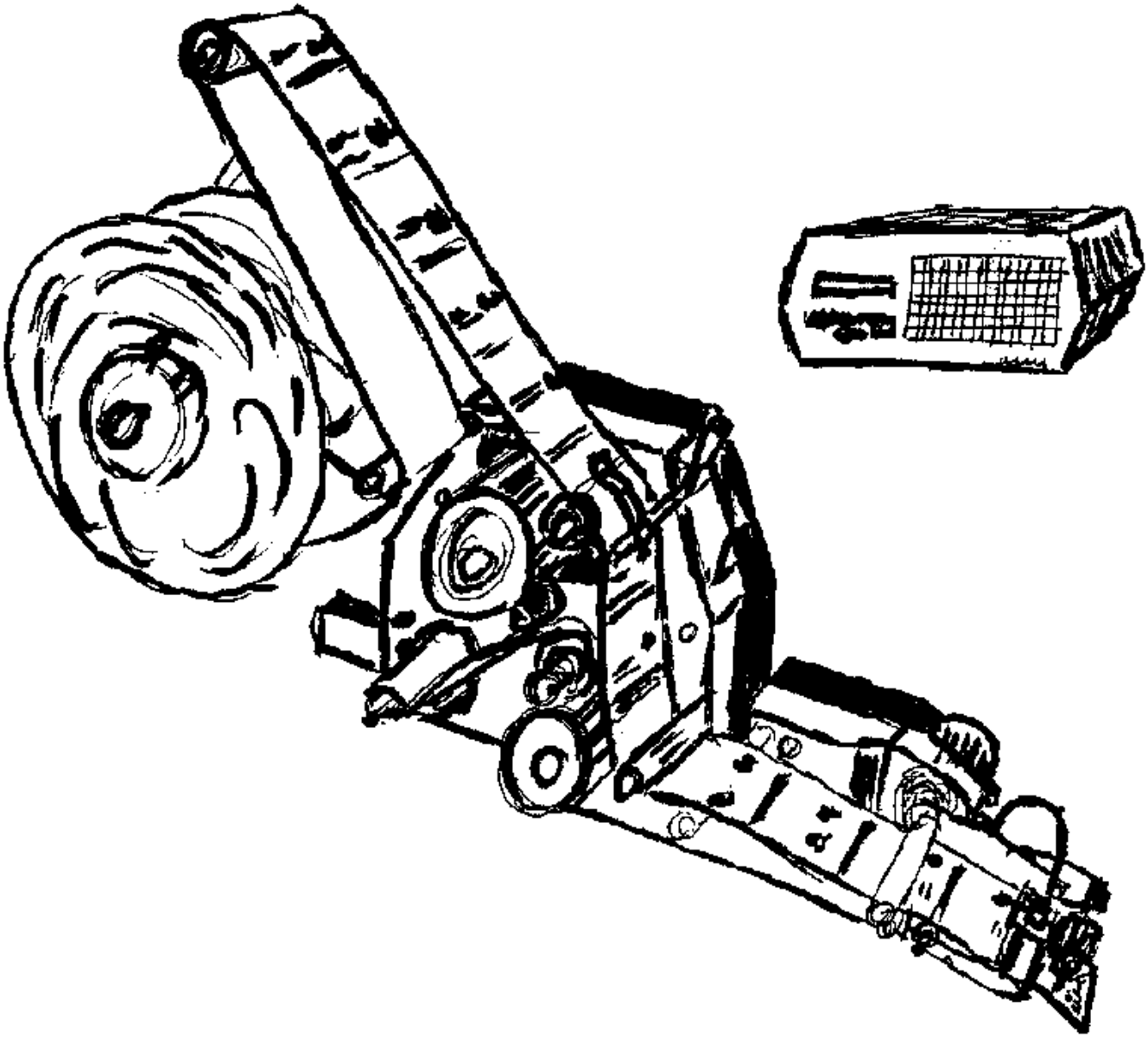

Guhl + Scheibler AG
Pfeffingerring 201
CH-4147 Aesch

Telefon 061-78 20 20
Telex 62663
Telegramm Guhlscheibler

9952.211.1

Ausgabe
Edition I/84

Massgebend ist jeweils die neueste Ausgabe
Urheberrecht vorbehalten

Decisive is always the latest edition
All rights strictly reserved

Table of Contents Page

1. INTRODUCTION 1

2. MECHANICAL ADJUSTMENTS 3

2.1 Traction unit 3
2.1.1 Threading the label web 3
2.1.2 Adjustment of rewinder coupling force 3
2.1.3 Readjustment of paper brake 4
2.1.4 Longitudinal adjustment on module rail 4

2.2 Flap adapter 5
2.2.1 Gradient adjustment of flap adapter 5
2.2.2 Adjustment of pressure roller of flap adapter 5

2.3 Adjustment of mechanical label scanner 6

2.4 Flat printer 7
2.4.1 Adjustment of printing position on label 7
2.4.2 Adjustment of backpressure 7
2.4.3 Ribbon replacement 8
2.4.4 Typesetting 8

2.5 Rotary printer 9
2.5.1 Adjustment of printing position on label 9
2.5.2 Adjustment of backpressure roller 10
2.5.3 Installation of pressure cylinder 10
2.5.4 Installation of inking roller 10
2.5.5 Dosing the quantity of ink 10

3. ELECTRIC INSTALLATION 11

3.1 Introduction 11

3.2 Connection diagram 12

3.3 Monitor 13
3.3.1 Monitor chassis 13
3.3.2 Monitor print 14

3.4 Traction unit 15
3.4.1 Traction unit print 15

3.5 Label scanners 16
3.5.1 Optical label scanner 16
3.5.2 Mechanical label scanner 16

		Page
3.6	Goods scanners	17
3.6.1	G+S speed-measuring IR-goods scanning	17
3.6.2	Reflex scanning	17
3.6.3	Electro-mechanical scanning	17
3.7	Label stock indicator	18
3.8	Magnetic adapter	19
3.8.1	Magnetic adapter print	19
3.9	Flat printer	20
3.9.1	Flat printer print	20
3.10	Rotary printer	21
3.10.1	Rotary printer print	21
4.	TECHNICAL DESCRIPTION	22
4.1	Flow chart of dispensing process	22
4.2.1	Distance of goods, position, suppression 30	23
4.2.2	Minimum goods distance required	24
4.3	Scanning area of optical label scanner	25
4.4	Permissible speed variation of goods conveyor system	25
5.1	Hardware test with standard test software included in EPROM	26
5.1.1	Dispenser connections for dispenser test	32
5.2	NV-RAM initialization	33
5.3	Program-mode	35
A.	APPENDIX	38
A.1	Technical Data	38
	Monitor	38
	Traction unit	39
	Magnetic flap adapter	40
	Goods scanner	40
	Flat printer	41
	Rotary printer	42
A.2	Dimensions - design of the system	43
A.3	Program-name key	45
A.4	Error messages	46
	Table of system errors	49
	Troubleshooting	51
A.5	Memory and I/O Map	56

A.6 MONITOR
- Print diagram (GS071)
- Print components diagram
- Power supply

A.7 TRACTION UNIT
- Print diagram a) (GS075)
- Print diagram b) (GS075)
- Print components diagram

A.8 MAGNETIC FLAP ADAPTER
- Print diagram (GS070b)
- Print components diagram

A.9 FLAT PRINTER
- Print diagram (GS078II+GS083/part 1)
- Print diagram (GS078/part 2)
- Print components diagram

1. INTRODUCTION

Special characteristics of the COLLAMAT 8510/20-system:

- of low abrasion, no clutch/brake system,
- compact, easy to handle due to overhung, modular construction,
- easy to operate due to interactive capacity,
- quickly adjustable to other labelling tasks.

The monitor case, which is completed separated from the traction unit, with 16-digit display and foil-keyboard, has the following standard equipment:

- processor system incl. operating system and 4K×8 NV-RAM
  - monitor 13V, 4A
  - traction unit 28V, 5.6A
  - rotary printer 28V, 2.5A
  - reserve 20V, 8A
  - connected supply output for 220V (flat printer or magnetic flap adapter)

- integrated software:
  - self-test program, is automatically carried out on switching on the device,
  - 5-digit preselection counter for each dispenser program with indication of preselection and amount,
  - impulse suppression for the path-dependent suppression of goods scanner after the labelling process,
  - electronic adjustment of stick-on position,
  - electronic adjustment of predispenser,
  - automatic adjustment of optical label scanner; the optimum densitometric value is stored separately for each individual dispensing program,
  - automatic adjustment of the traction unit's dispensing speed to the goods speed of the speed-measuring G+S IR-goods scanner. The speed of all the goods is measured individually,
  - dispensing process released with press of a button (DISP),
  - standard storage of 4 different dispensing programs in non-volatile non-battery memory (NV-RAM) (expandable to a maximum of 12 programs),
  - tape-end control; permanent alarm is given at label reel end with a message on the LCD-display,
  - traction unit control; permanent alarm and message are given if the backpressure roller of the traction unit is open or the carrier paper is entangled,
  - paper-feed control; alarm is given in the case of torn label web, slip in traction unit, missing label on label web, or failure of the label scanner signal. In the event of errors arising, dispenser and conveyor are turned off (standard equipment includes relay), followed by a sound signal and the corresponding error message on the LCD-display. Less serious errors are ignored by activating the DIL-

switch 4 on the rear panel of the monitor. This can be used whenever the continuous operation of the (packaging) plant takes precedence over faultless labelling.
In addition, by operating the DIL-switch 7 on the rear panel of the monitor the dispenser can be blocked when errors arise without interrupting the operation of the goods conveyor plant.

- Label stock control (option); when the label reel falls below the adjustable minimum label reel diameter, a warning is signalled on the LCD-display. At the same time a relay is activated. The status can thus be signalled by means of optical or acoustic warning devices.

The traction unit and the peripheral equipment are uniformly mounted on a module rail (position rail with integrated scale).
The electronic control is integrated in the peripheral equipment itself. The individual units are controlled by means of the 14-pole flat cable bus-system located in the module rail of this system. Refer to chapter 3.2.
All the mechanical parts are corrosion-proof, the traction roller of the traction unit is provided with a special coating for permanent nonslip torque transmission onto the carrier paper.
The coiling force of the rewinder as well as the braking power of the label web brake are adjustable at the traction unit from the outside. Refer to chapter 2.1.2 and 2.1.3.
In the Power OFF position of the dispenser, the traction roller of the traction unit can easily be turned by hand to simplify the setting up of the dispenser.

2. MECHANICAL ADJUSTMENTS

2.1 Traction unit

2.1.1 Threading the label web

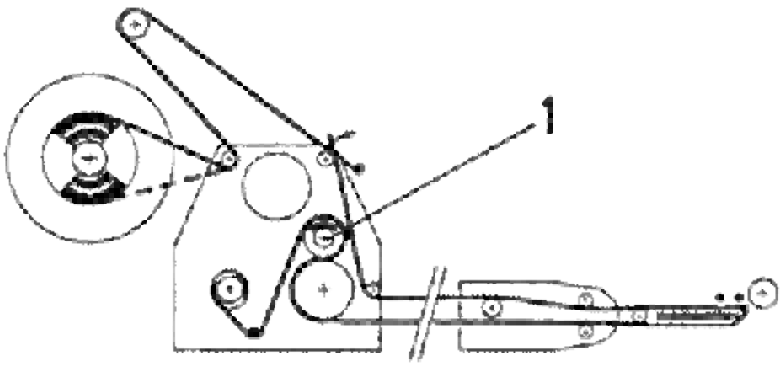

Fig. 1

Thread the label web as shown in the diagram up to the discharge edge and draw out by approx. 1 m. Detach the labels from the carrier paper at the drawn-out web. Then open the backpressure roller by turning the knob (1), lay the carrier paper (protective paper) over the discharge edge (dispensing edge) and finish threading the carrier paper as per figure 1. Close the backpressure roller. Adjust the side guides of the belt leaving 0.5 mm free space to the label web edge.

2.1.2 Adjustment of rewinder coupling force

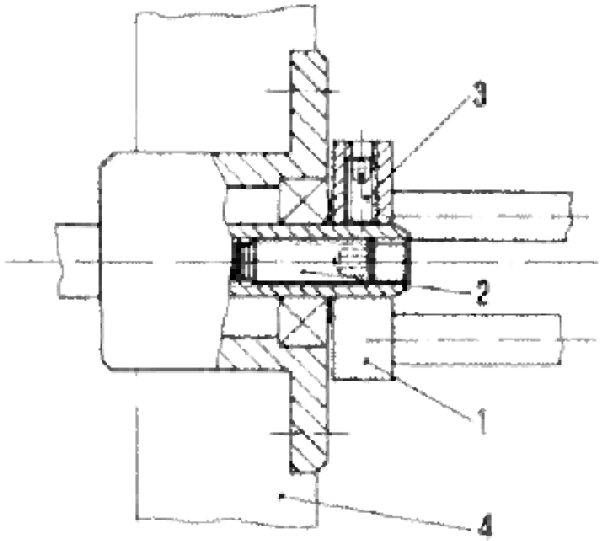

Fig.2

The coupling force of the rewinder is factory-set. Proceed as follows for readjustment:

Detach winding spindle (1) after unscrewing the M5-bolt (3). Screw in M8-bolt (2) accordingly -> harder coupling, unscrew -> softer coupling.

2.1.3 Readjustment of paper brake

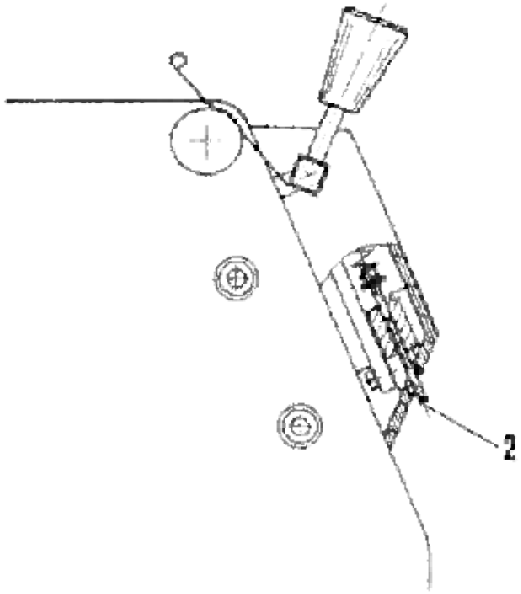

The braking force is factory-set. If required, readjust with M3-bolt (2) in the belt-end box of the dispenser from the outside.

Screw in bolt -> larger braking force
Unscrew bolt -> smaller braking force

Fig. 3

2.1.4 Longitudinal adjustment on module rail

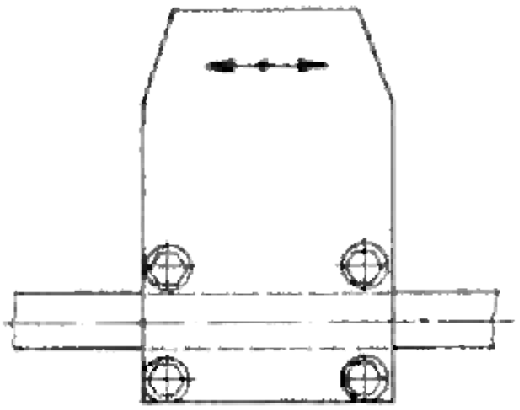

Unscrew 4 bolts with special tool (wrench for socket head cap screws 5 mm) ½ turn (adapter only 2 bolts).

Move device, observing scale on module rail.

Tighten bolts equally.

Fig. 4

2.2 Flap adapter

2.2.1 Gradient adjustment of flap adapter

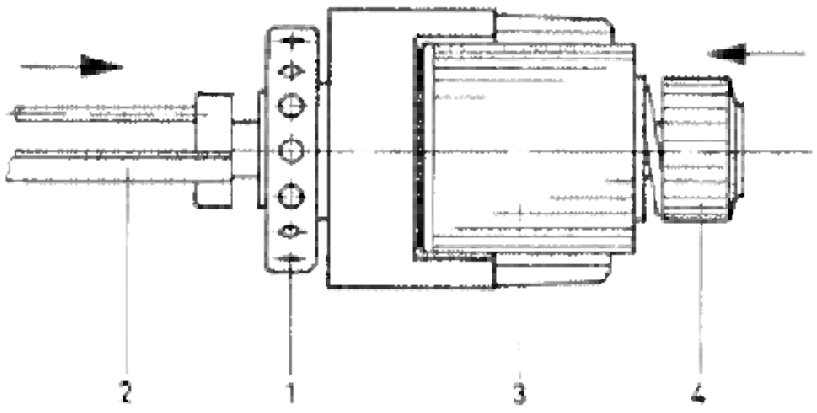

Fig. 5

The gradient of the flap adapter can be changed against the module rail: Unscrew nut (1) with two turns (refer to fig. 5), with special hexagonal spanner (included in supply schedule). Push adapter in the direction indicated by the arrow (2), turn to desired setting at ring (3). Retighten nut (1).
The contact pressure of the flap adapter without magnet or of the magnetic flap adapter is variable: push in button (4) in the direction indicated by the arrow, twist for appropriate spring tension and adjust until it meets the next stop.

2.2.2 Adjustment of pressure roller of flap adapter

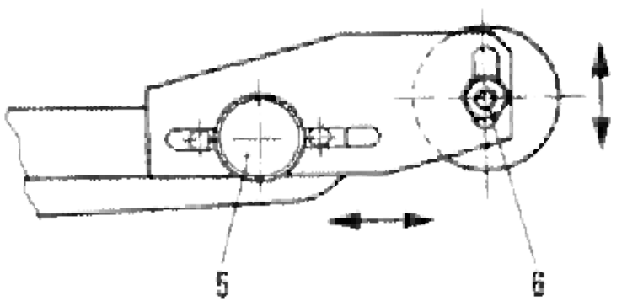

The pressure roller of the adapter can be adjusted depending on the labels and goods:
- horizontal adjustment with knurled nut (5)
- vertical adjustment with hexagonal nut (6).

Fig. 6

2.3 Adjustment of mechanical label scanner

The mechanical label scanner (not on magnetic flap adapter) is an alternative to the optical label scanner and is mainly used for transparent labels.

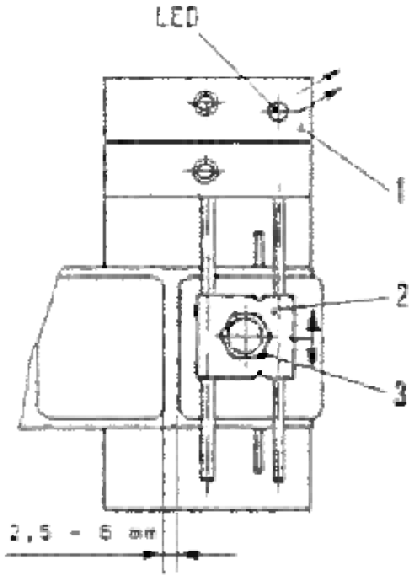

Adjustment:

- Position label under scanning head, LED-display at scanning support must illuminate. If this is not the case, unscrew the nut on the scanning head and turn it counterclockwise until the LED illuminates.
- Turn the scanning head clockwise until the LED-display no longer lights up.
- A ¼ turn forward and retighten nut.

Position label interspace under scanning head. LED-display must illuminate.

Note:
No adjustments necessary on traction unit/monitor!

1: Scanning support
2: Scanning head
3: Nut

Fig. 7

2.4 Flat printer

2.4.1 Adjustment of printing position on label

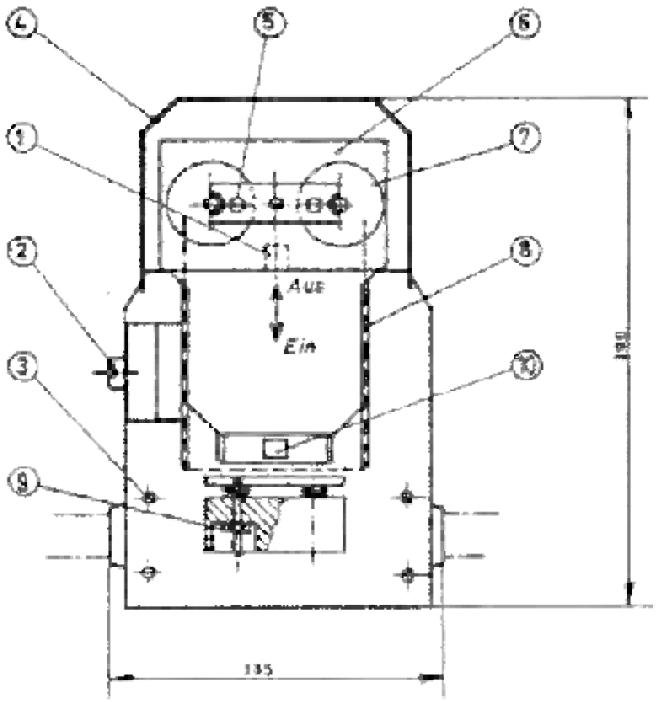

1 Press switch
2 Screws
3 Screws (module-bar)
4 Hood
5 Safety lever
6 Plate
7 Felt discs
8 Inking ribbon
9 Nut (printing plate)
10 Composing frame

Fig. 8

To adjust the flat printer move it in longitudinal and crosswise direction by unscrewing the bolts (2) and (3) as shown in figure 8.

2.4.2 Adjustment of backpressure

Backpressure and parallelism are factory-set on medium thick paper. For readjustment turn the corresponding nuts (9), refer to figure 8, with 7 mm socket spanner. Right way round -> weaker, left way round -> stronger print.

2.4.3 Ribbon replacement

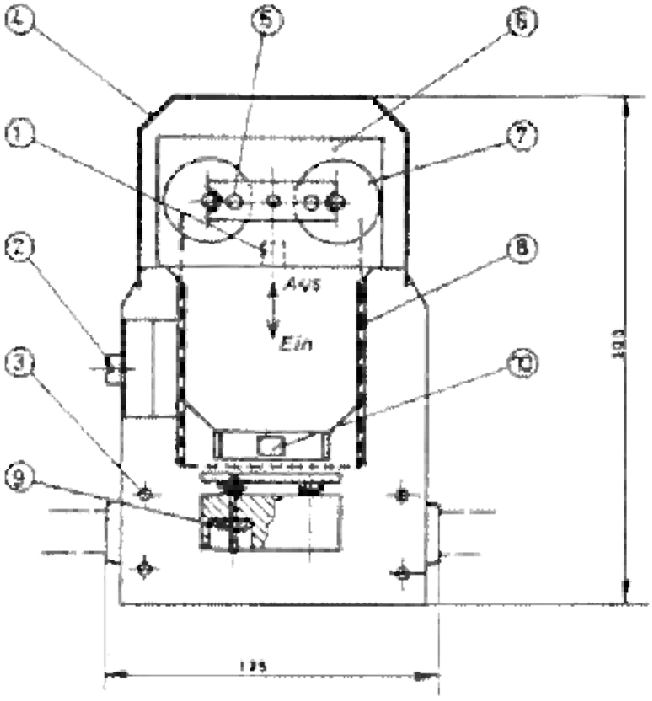

Remove lid (4). Turn lock lever (5) and remove plates (6). Detach felt disk (7). Slacken the ribbon (8) by turning the empty spool. Pull off spool.
Insert new ribbon:
The driving bolts on the ratchet wheels must be inserted in the driving holes of the spools. Tension the loose ribbon by turning the spool. Readjust the felt disks (7). Remount plate (6).
After a test run, refit the lid (4).
Ribbon reverse:
The ribbon reverse is automatically activated when a spool runs empty.

Fig. 9

2.4.4 Typesetting

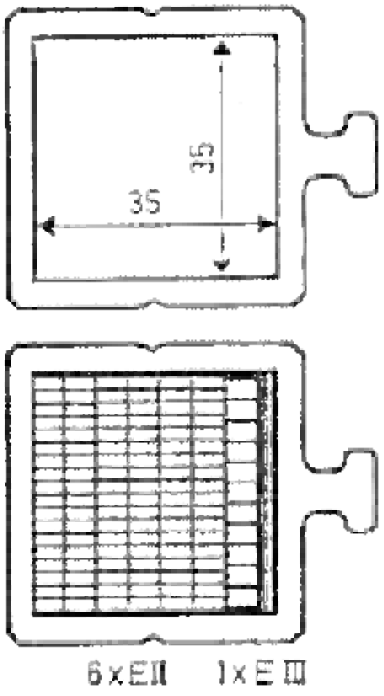

The types required for setting are found in a separate type box. Pull out frame (10). Insert the types into the type combs in legible order.
The type combs can be inserted in the frame in two directions so that printing is enabled either in direction of label feed or crosswise.

Fig. 10

2.5 Rotary printer

2.5.1 Adjustment of printing position on label

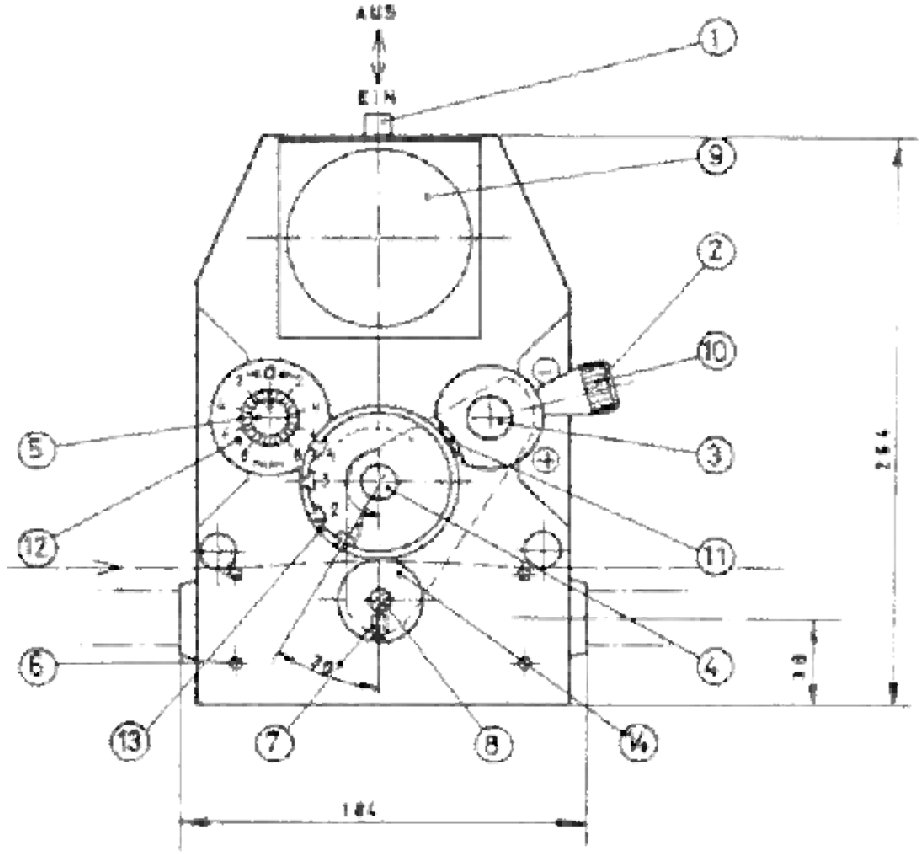

1 press switch (network)
2 knurled screw
3 knurled screw
4 knurled screw
5 printing shift
6 screws (module-bar)
7 locking screw
8 shaft (back pressure roller)
9 motor
10 amount of ink
11 inking roller
12 printing position
13 printing cylinder
14 back pressure roller

Fig. 11

Rough adjustment: Unscrew the four bolts (6), refer to figure 11, and move the complete printer unit on the module rail.

Fine adjustment: Push and turn the printing shifter (5), refer to figure 11, max. shift: ± 8 mm.

2.5.2 Adjustment of backpressure roller

Backpressure and parallelism are factory-set on medium thick paper. For readjustment of backpressure (parallel): unscrew the stud bolt (7), see figure 11, behind the backpressure roller and twist axle (8). Retighten bolt (7).

Type RDW 160

Twist the axle (8) while holding the setting ring.

The parallelism is adjusted as follows:

Unscrew the stud bolt (7) in front of the backpressure roller and turn on the same ring until the desired parallelism is achieved. Then retighten stud bolt (7).

2.5.3 Installation of pressure cylinder

Turn pressure-shifting knob (5), see figure 11, to "0"-position. Remove knurled bolt (4). Switch on the device (monitor), turn on rotary printer (abbr.: RDW) with print switch (1). Printing shaft (4) automatically turns to zero position. Move pressure cylinder on printing shaft and position nut no. 1 as shown in figure 11, snap in the cylinder, insert the knurled bolt (4).

Type RDW 160

Instead of the knurled bolt (4), remove the knurled bolt (3) with the bearing plate, and reinsert again.

2.5.4 Installation of inking roller

Remove knurled bolt (3). After removing (tearing off) the two covers with the protective casing move the inking roller onto the shaft (3). Snap in driving pin with nut. If necessary, twist the printing shaft (4) by hand (switch off 1). Insert knurled bolt (3).

Type RDW 160

Together with the knurled bolt (3) also remove the bearing plate, and reinsert again.

2.5.5 Dosing the quantity of ink

Unscrew knurled bolt (2), see figure 11, and move to "+" or "-". Retighten bolt.

3. ELECTRIC INSTALLATION

3.1 Introduction

Wiring as shown in the connection diagram in chapter 3.2. The control signals and power supply +12V and GND are transmitted through the 14-pole through flat cable, which is connected to the traction unit and flat printer and/or rotary printer and/or flap adapter. The signals from the traction unit to the monitor are transmitted via the 26-pole flat cable.
An additional 3-core connection cable (3 x 0.75 mm2) transmits the connected supply voltage from the monitor to the flat printer and/or magnetic flap adapter.

The sender (2-core connection cable) and the receiver (3-core connection cable) can be connected both to the traction unit itself and to the flat printer and rotary printer resp. The connection of the LSC-signal to the monitor in the latter case is effected by the through 14-pole flat cable to the traction unit, and subsequently from the traction unit to the monitor via the 26-pole flat cable.

If no standard goods or label scanners are used, the electric input specifications are to be observed. The CMOS-type 74C914 is used to buffer the inputs LLO, OOL, GSC1, GSC2, LSC as well as RESIN, IMPR, NOL, CODE and TUNIT. All the inputs are pulled up with 2.7k to +12V and equipped with a low-pass filter. The IC is equipped with a special input protective circuit, making it possible to apply input voltages which exceed the supply voltage. The characteristic threshold voltages of the Schmitt-trigger inputs are 8.1V/3.8.

3.2 Connection diagram

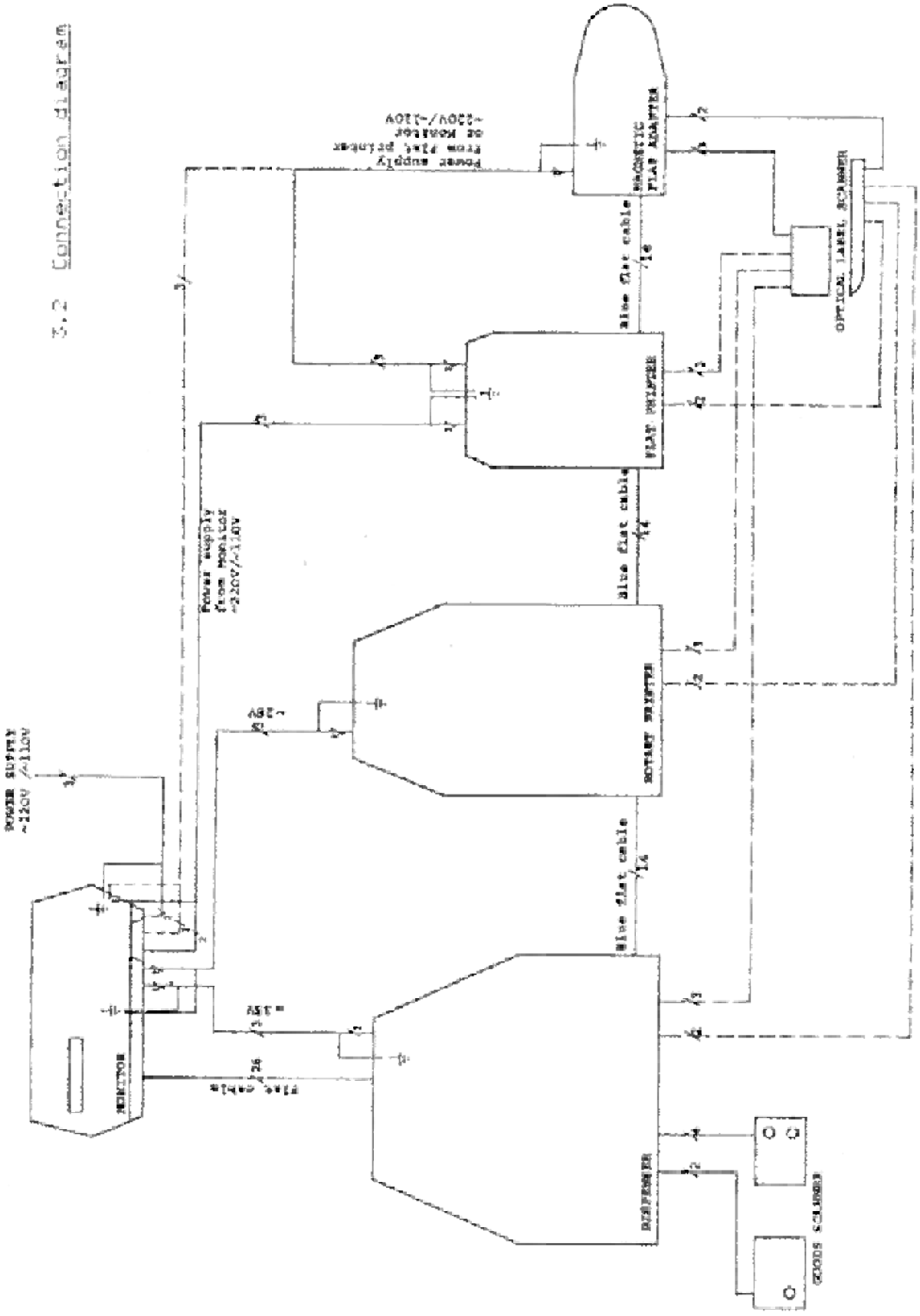

3.3 Monitor

3.3.1 Monitor chassis

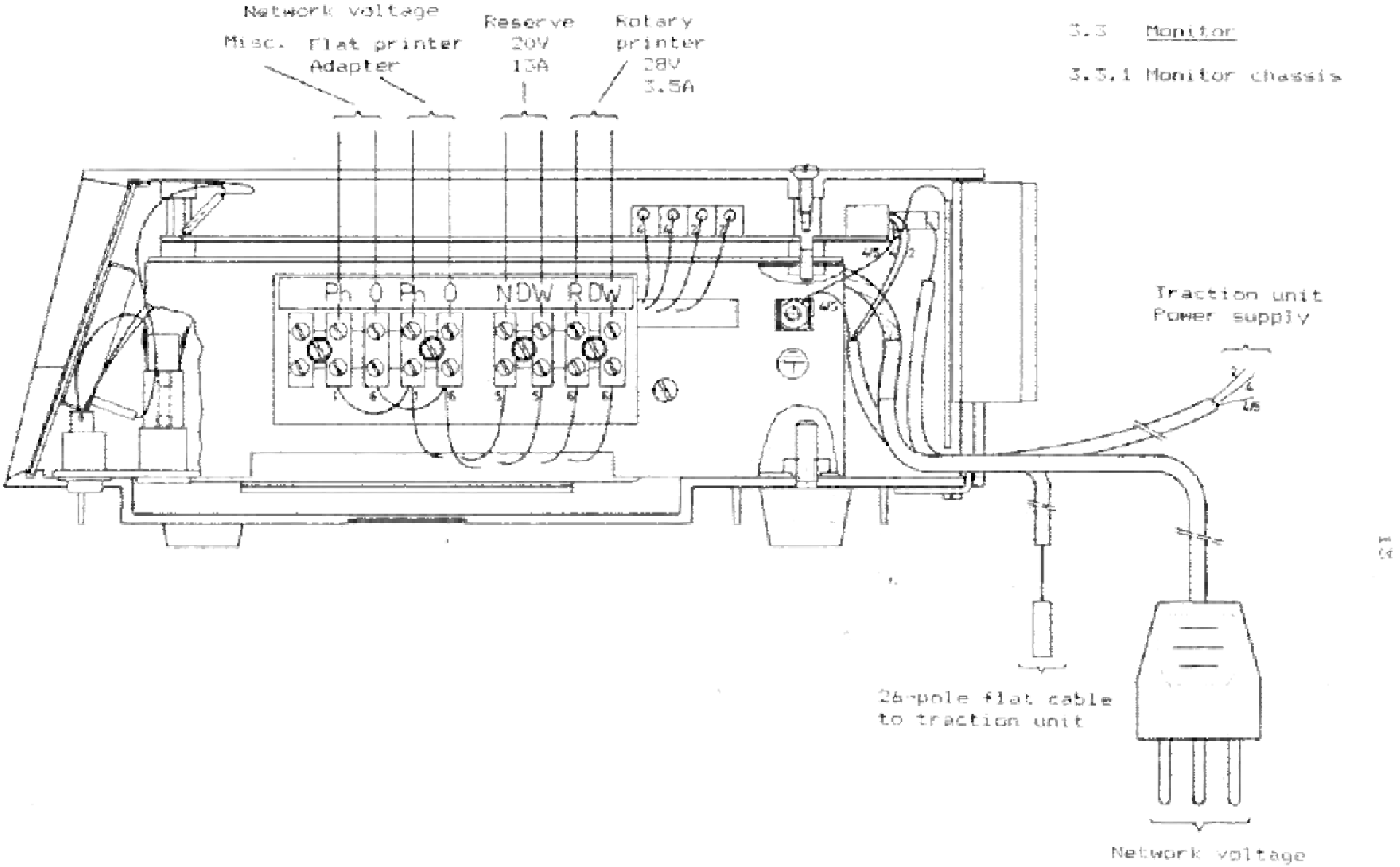

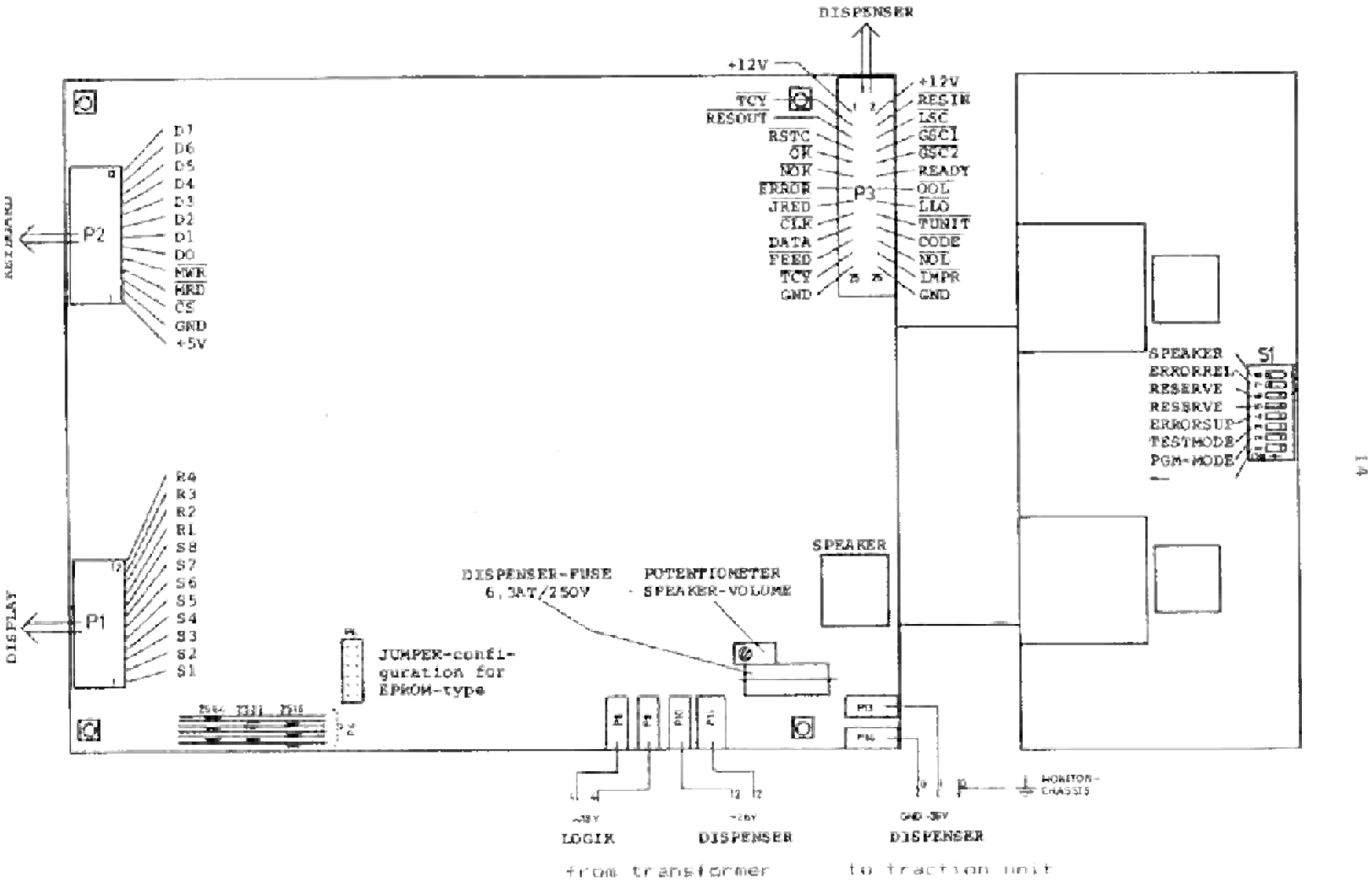
DISPENSER
+12V
TCY
RESOUT
RSTC
CK
NOK
ERROR
JRED
CLK
DATA
FEED
TCY
GND
P3
+12V
RESIN
LSC
GSC1
GSC2
READY
OOL
LLO
TUNIT
CODE
NOL
IMPR
GND
KEYBOARD
P2
D7
D6
D5
D4
D3
D2
D1
D0
MWR
MRD
CS
GND
+5V
DISPLAY
P1
R4
R3
R2
R1
S8
S7
S6
S5
S4
S3
S2
S1
SPEAKER
S1
ERRORREI
RESERVE
RESERVE
ERRORSUP
TESTMODE
PGM-MODE
SPEAKER
DISPENSER-FUSE
6,3AT/250V
POTENTIOMETER
SPEAKER-VOLUME
JUMPER-confi-
guration for
EPROM-type
LOGIX
DISPENSER
DISPENSER
from transformer
to traction unit

3.4 Traction unit

3.4.1 Traction unit print

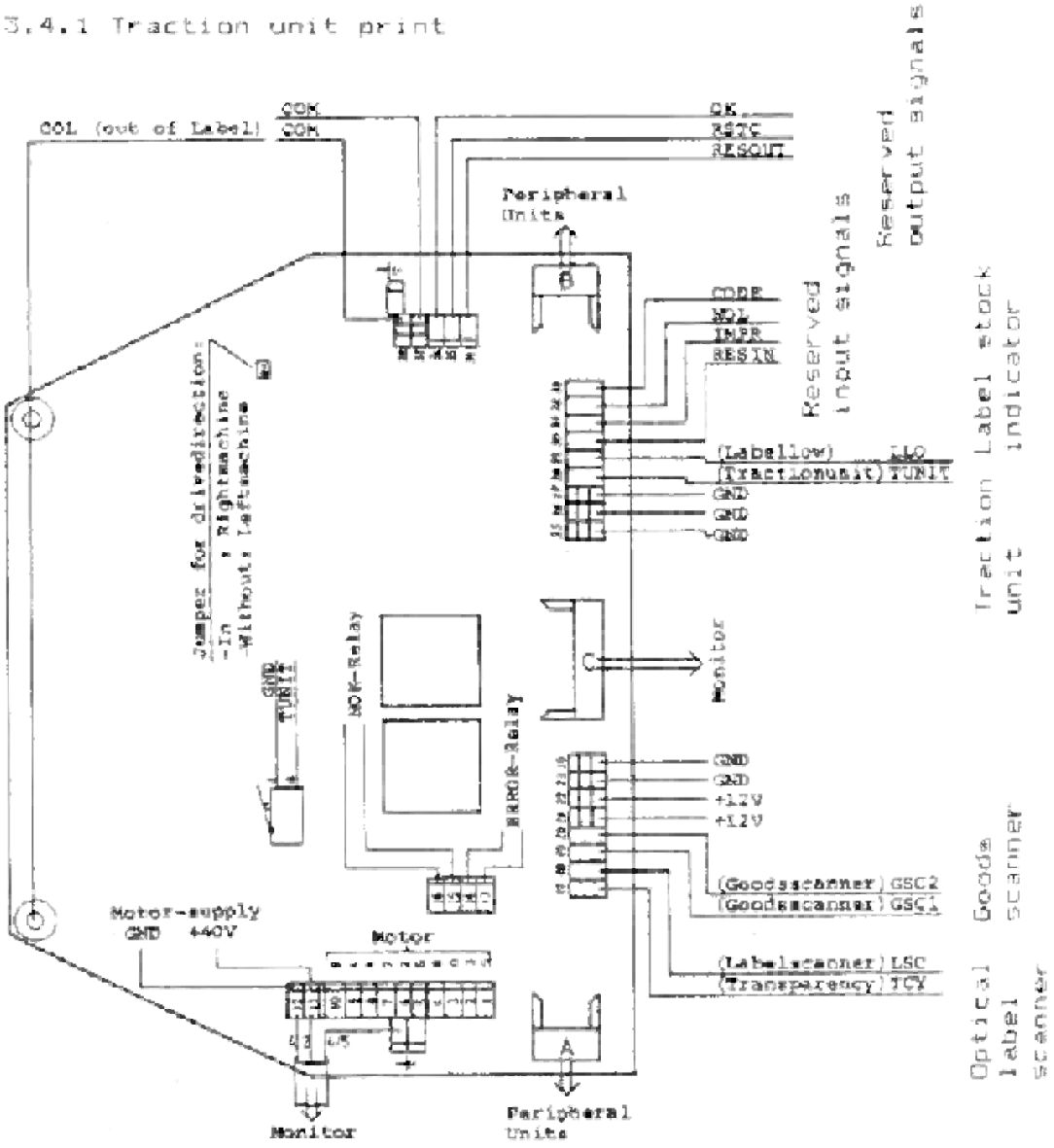

- NOK: is connected to the relay for optical or acoustic signalling, e.g. signalling of label stock.

- ERROR: is connected to the relay to stop the conveyor system in the event of nonexistence of the label web.

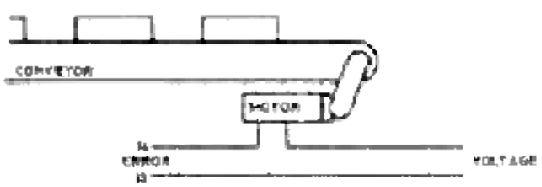

3.5 Label scanners

3.5.1 Optical label scanner

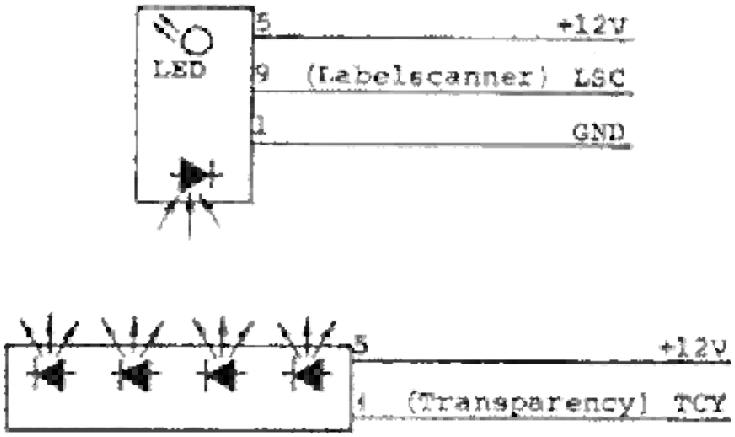

3.5.2 Mechanical label scanner

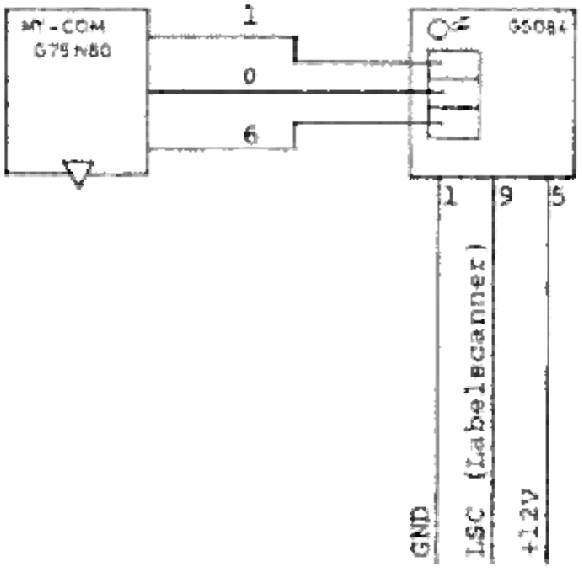

3.6 Goods scanners

3.6.1 G+S speed-measuring IR-goods scanning

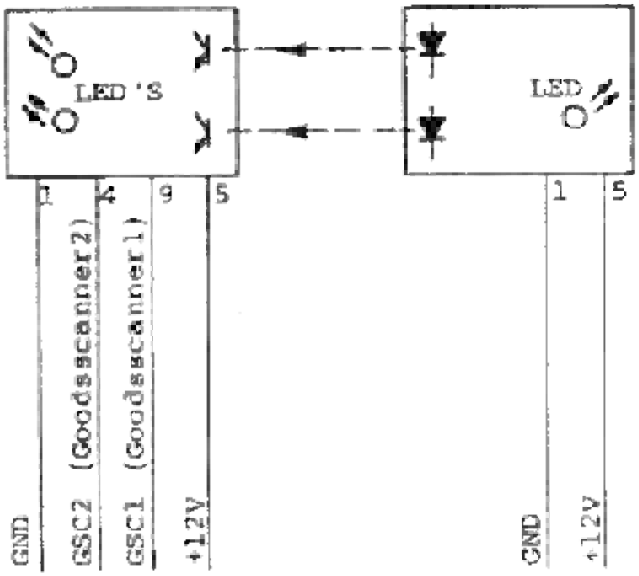

3.6.2 Reflex scanning

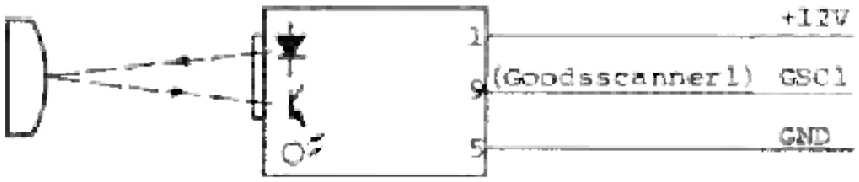

3.6.3 Electro-mechanical scanning

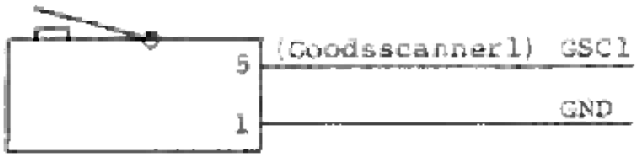

3.7 Label stock indicator

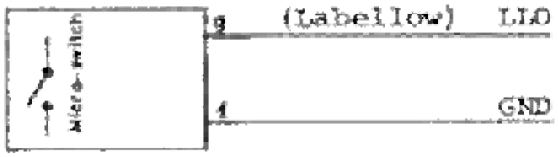

3.8 Magnetic adapter

3.8.1 Magnetic adapter print

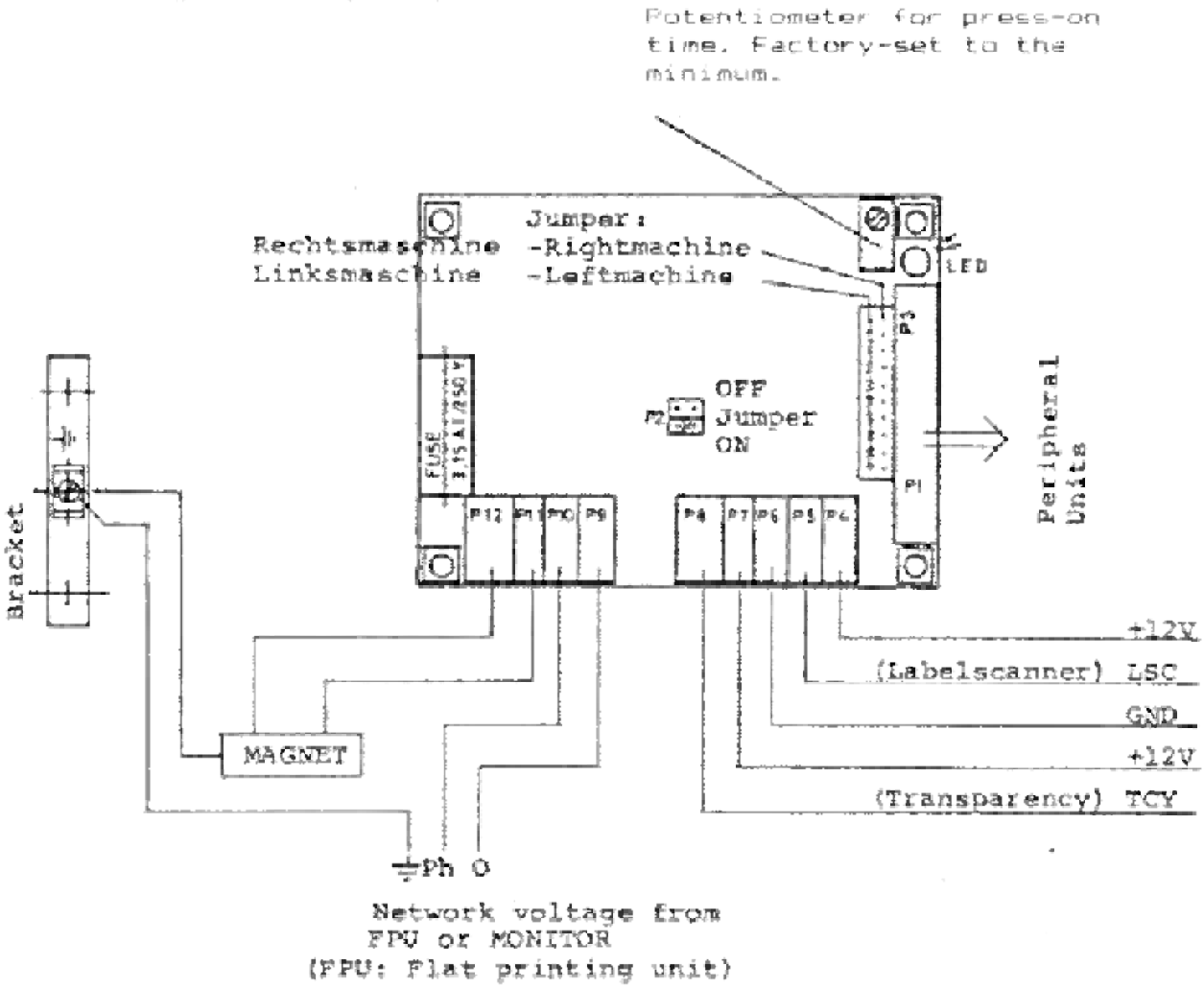

Attention!

Incorrect setting of the jumper P3 (for left/right machine) may cause damage to the magnetic flap adapter!

3.9 Flat printer

3.9.1 Flat printer print

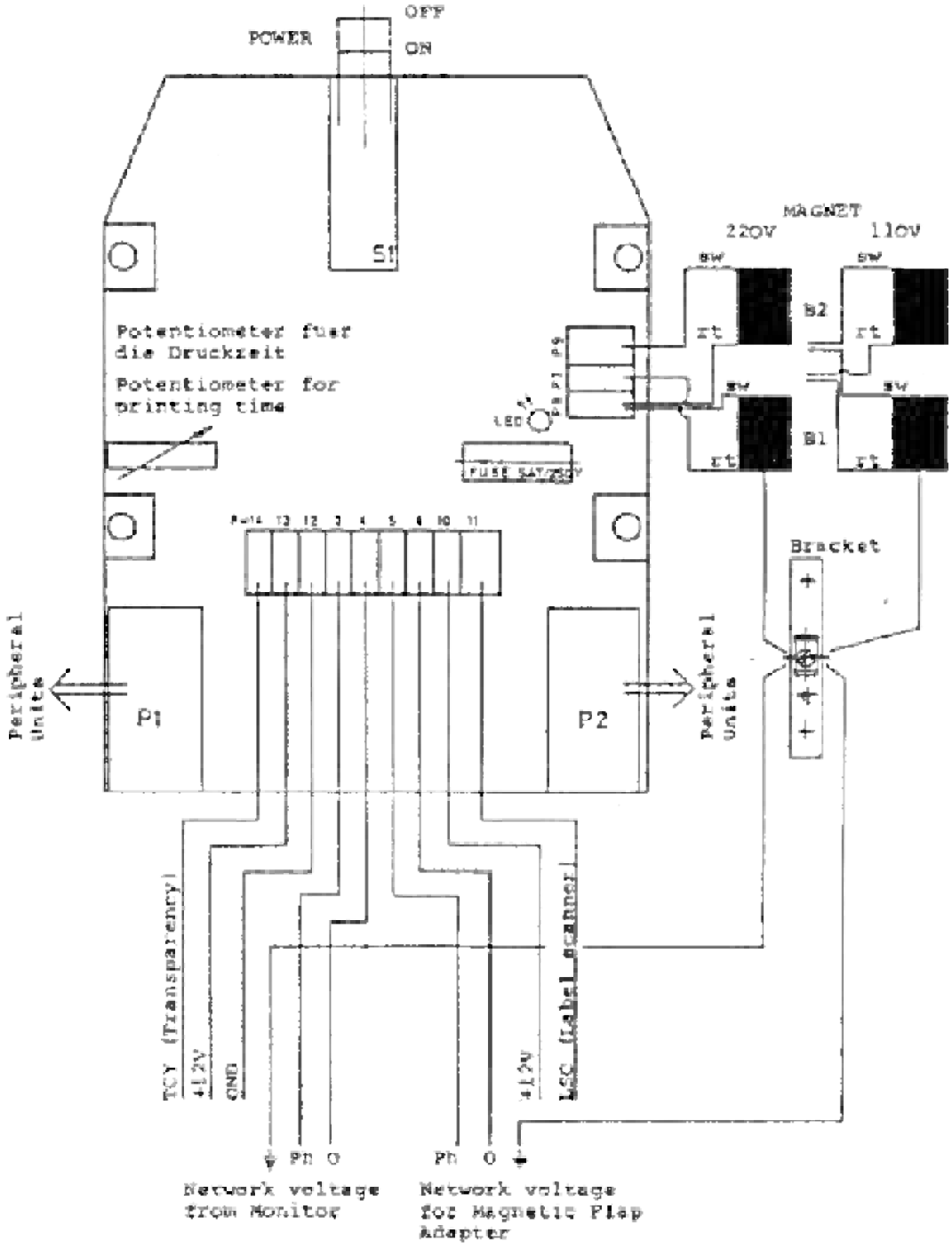

3.10 Rotary printer

3.10.1 Rotary printer print

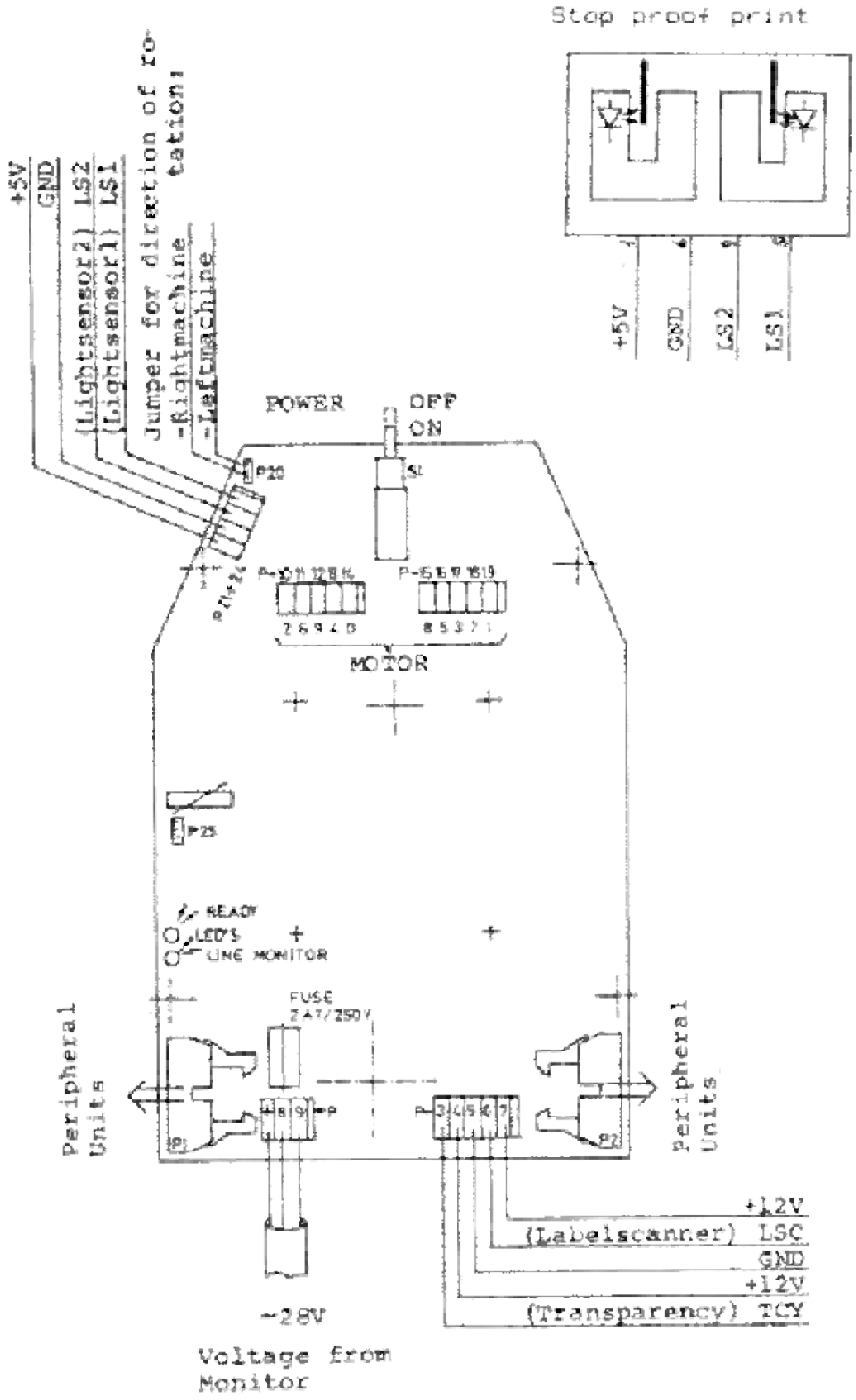

4.1 Flow chart of dispensing process

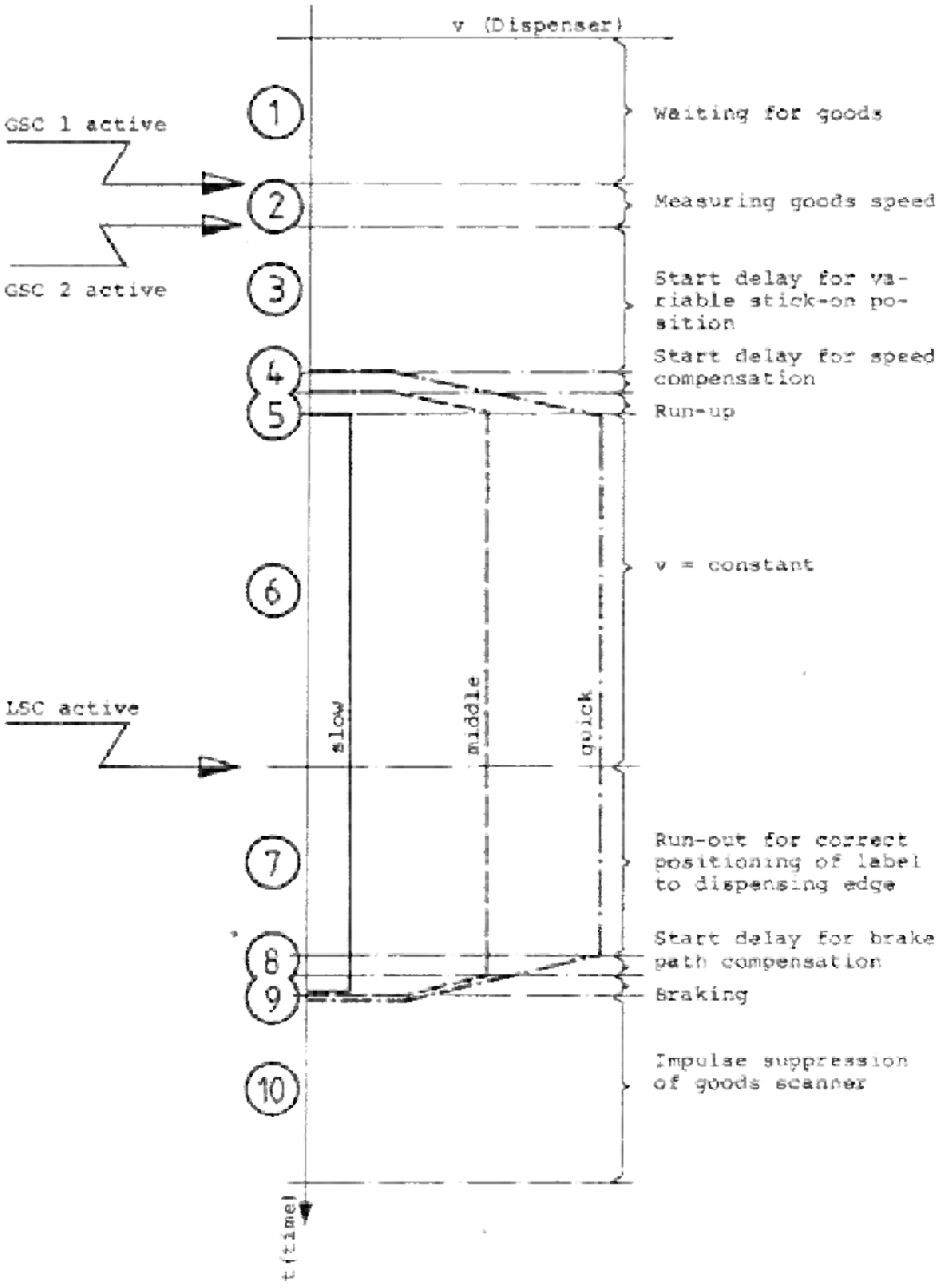

4.2.1 Distance of goods, position, suppression > 0

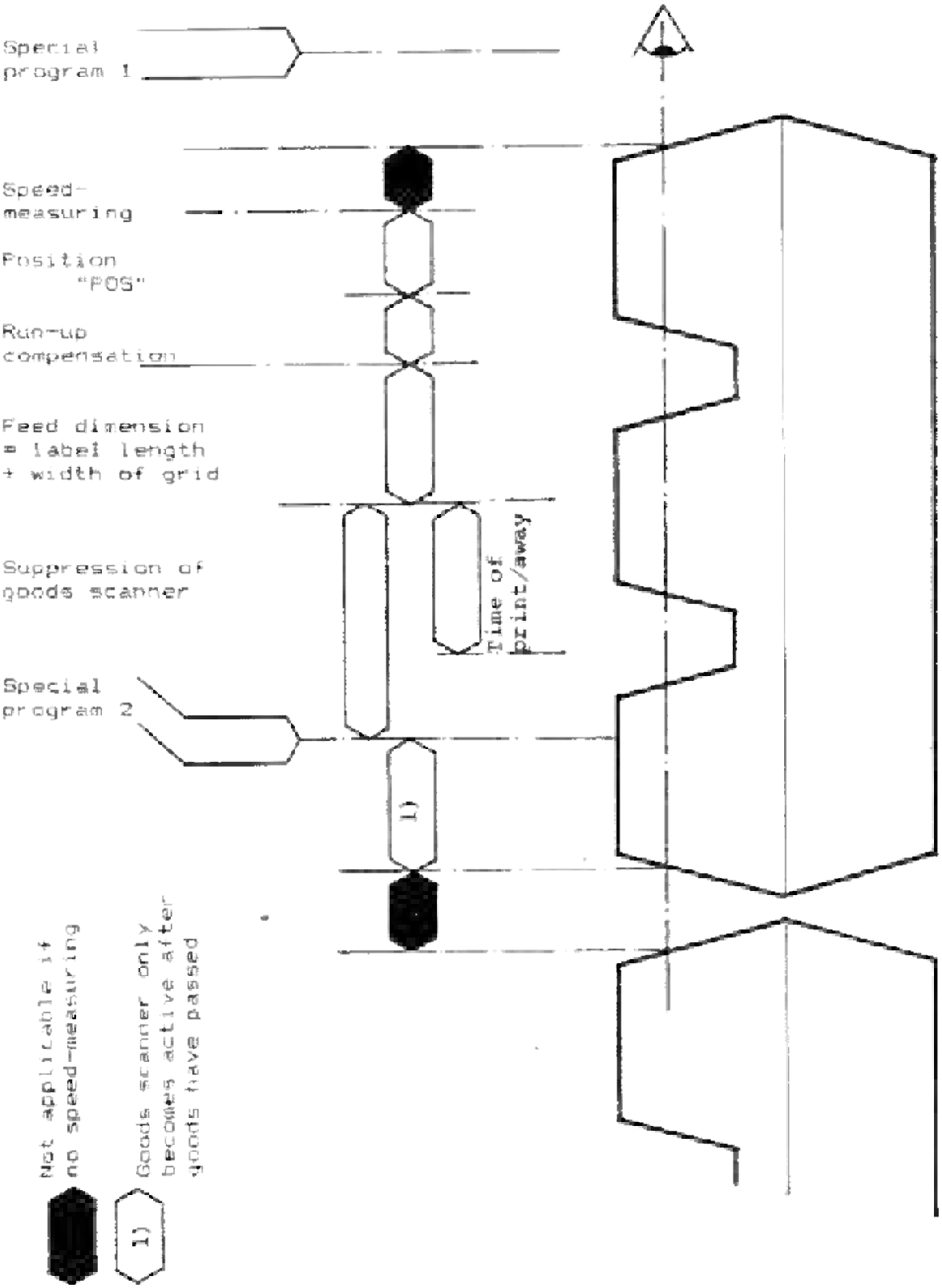

4.2.2 Minimum goods distance required

- with automatically adjusted dispensing speed:

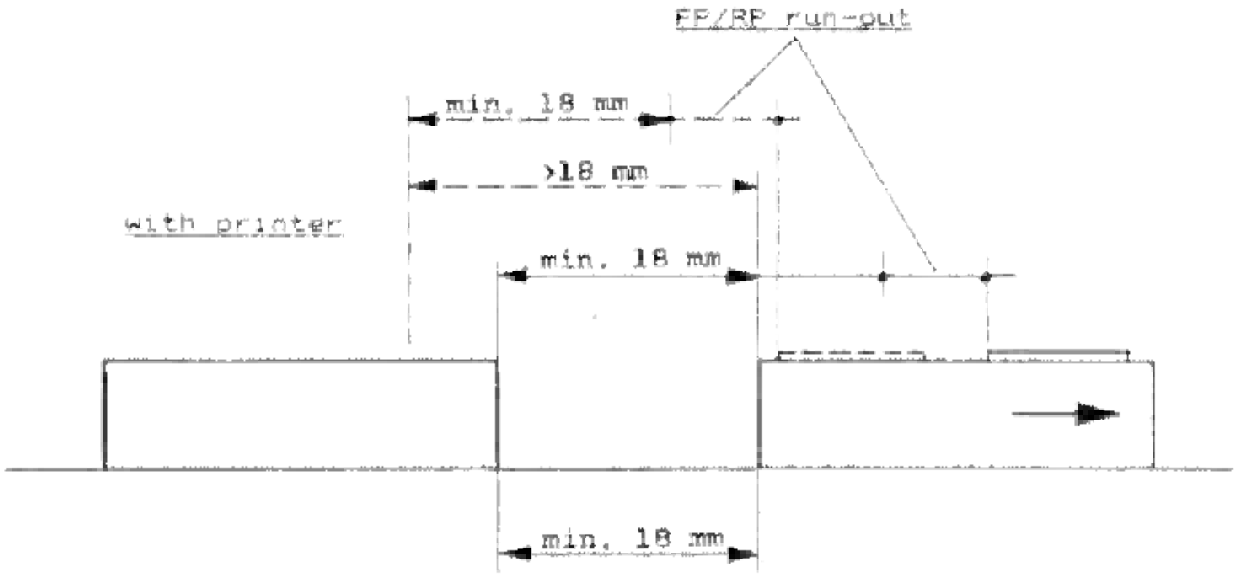

- with fixed programmable dispensing speed:

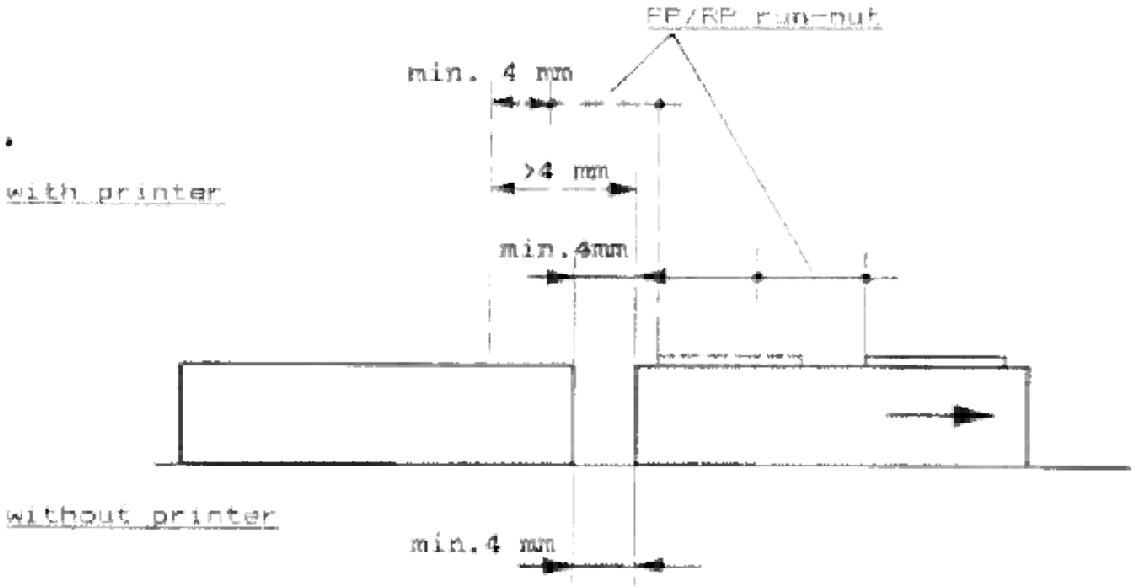

4.3 Scanning area of optical label scanner

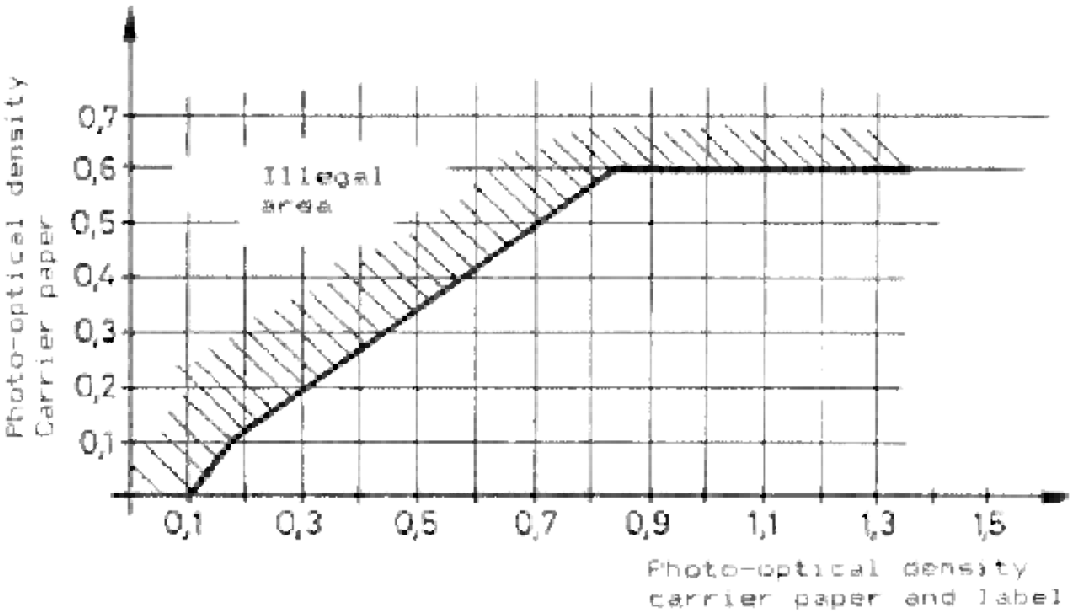

4.4 Permissible speed variation of goods conveyor system

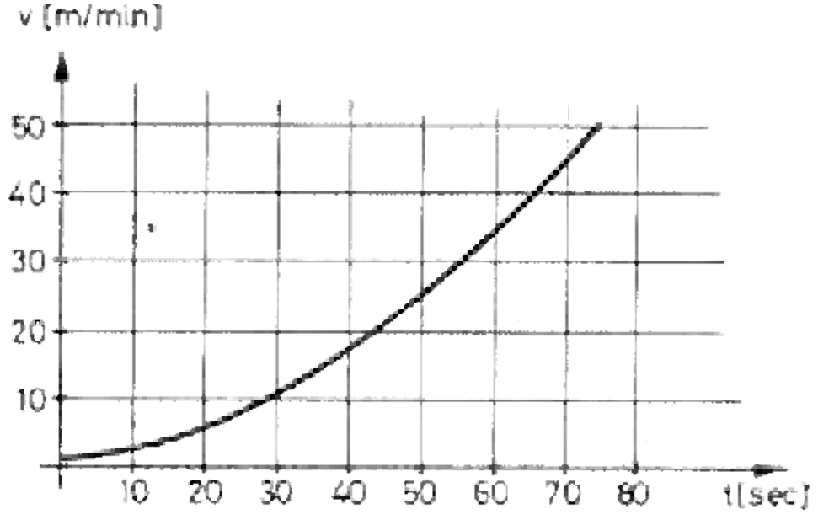

Measure speed and dispense

Theoretically, the goods speed may only change between 2 dispensing processes!

5.1 Hardware test with standard test software included in EPROM

With the test adapter the program enables the execution of a detailed hardware test of the monitor and a complete test of the dispenser and peripheral units with the corresponding test cable. Both components are included in the supply schedule of the test device set.
The program completes the self-test process carried out after each POWER ON operation and is executed subsequently, when DIL 3 is LOW (ON).
(DIL-switches 7+8 must also be ON for the test).

The first part tests the keyboard, the non-volatile storage in the NV-RAM and the DIL-switches 1-6. The whole first part of the program can be skipped by pressing the 'ENTER' key.

* The keyboard test is started by pressing all the keys in the order indicated below:

```
:29:25:21:17:13: 9: 5: 1:      I
:30:26:22:18:14:10: 6: 2:      I
:31:27:23:19:15:11: 7: 3:      I
:32:28:24:20:16:12: 8: 4:      V
```

A click sound means the correct key has been pressed, otherwise an error pip sound follows.

If a malfunction occurs, replace the keyboard. If this does not help, check the tracks NW4, NW5 and IC U28 leading to the keyboard plug.

* The non-volatile storage in the NV-RAM is tested as follows:

First, the counter located in the NV-RAM (address HEX 203E) will indicate the number of non-volatile storages. This counter is then increased by one and stored (non-volatile). For control purposes the new value is newly read out and indicated.
(The counter is zeroized on initialization of the NV-RAM's by the separately available program EPROM C85INIT, see chapter 5.2. It can, however, also be set to zero in the PGM-mode, see chapter 5.3).
The counter serves to supervise the number of non-volatile storages. Values exceeding 5000 are briefly indicated on switching on.

In the event of malfunctions, replace the NV-RAM's and re-initialize them (see chapter 5.2)

* To test the DIL switches 1-6 on the rear panel of the monitor, they must be closed and reopened. If the corresponding contact is in order, this is acknowledged with a pip sound. The program waits until the corresponding switch is actuated.

If a malfunction occurs, check the switches and the tracks leading to the switches, NW6 (switches 5,6), NW7 (switches 1-4), and IC U27.

Before carrying out the second part of the program, make sure the test adapter is connected (RESIN LOW). If not, the program jumps to the dispenser test (see page 29). Otherwise the monitor test is carried out, indicated on the display as:

* MONITOR TEST

The program which now follows is processed in an endless loop. The following inputs/outputs are connected to each other by luminous diodes:

OUTPUT	INPUT
FEED	IMPR, NOL
DATA	CODE
CLK	TUNIT
JRED	LLO
ERROR	ODL
NOK	READY
OK	GSC2
RSTC	GSC1
RESOUT	LSC

First the opencollector transistors of the IC U27 as well as the D/A converter resistances R72 to R77 are tested to control the transmission current of the optical label scanner TCY. The 6 stages are activated one after the other and the corresponding LED on the test adapter must become brighter in 6 stages. If this is not the case, replace IC U26 and check the resistances R72 to R77.

The next step is to set one output after the other high and to examine whether the connected input(s) is (are) low. As for the input LSC, first check whether flip-flop U19 can be set (ERROR 1019). The connected output RESOUT is then set low and checked whether the FF has been reset (ERROR 1020), RESOUT is then set high and checked whether the FF is still low (ERROR 1021). Finally, the FF is again set and checked whether the output is HIGH (ERROR 1022).
If an error occurs, this is indicated on the LCD as MONI.HW.ERROR.10XX (except for TCY errors).

MONI.HW.ERROR	MEANING
1001	IMPR NOT HIGH
1002	NOL NOT HIGH
1003	IMPR NOT LOW
1004	NOL NOT LOW
1005	CODE NOT HIGH
1006	CODE NOT LOW
1007	TUNIT NOT HIGH
1008	TUNIT NOT LOW
1009	LLO NOT HIGH
1010	LLO NOT LOW
1011	OOL NOT HIGH
1012	OOL NOT LOW
1013	READY NOT HIGH
1014	READY NOT LOW
1015	GSC2 NOT HIGH
1016	GSC2 NOT LOW
1017	GSC1 NOT HIGH
1018	GSC1 NOT LOW
1019	LSC NOT HIGH (U 19)
1020	LSC NOT LOW (U 19)
1021	LSC NOT LOW (U 19)
1022	LSC NOT HIGH (U 19)

. If an error '<SIGNALNAME> NOT LOW' occurs and the corresponding LED does not light up on the test adapter, this means either the connection input/output (test adapter, cable, plug, track), the corresponding pull-up resistance or the output driver is defective (output transistor does not close). With the help of the diagram and the signal name the corresponding output driver IC can now be determined and replaced accordingly.

Example: program stops with ERROR 1016 (GSC2 NOT LOW)
LED GSC2/OK does not illuminate.
Error : Connection input/output (cable, plug, test adapter) pull-up resistances R60, R91
IC U24 (interruption output transistor)

. If an error '<SIGNALNAME> NOT LOW' occurs and the corresponding luminous diode on the test adapter lights up, the probability is that the corresponding input driver IC is defective.

Example: program stops with ERROR 1016 (GSC2 NOT LOW)
LED GSC2/OK illuminates
Error : IC U23

. If an error '<SIGNALNAME> NOT HIGH' occurs and the corresponding luminous diode lights up, the corresponding output driver IC is most probably defective.

Example: program stops with ERROR 1015 (GSC2 NOT HIGH)
LED GSC2/OK illuminates
Error : IC U24 (output transistor short-circuit)

. If an error '<SIGNALNAME> NOT HIGH' occurs and the corresponding luminous diode on the test adapter does not light up, either the corresponding pull-up resistance or the input driver IC is defective.
Example: program stops with ERROR 1015 (GSC2 NOT HIGH)
LED GSC2/OK does not illuminate
Error : R81, R82, IC U23

The LC-display and the buzzer are tested indirectly. They are used to transmit messages.

* DISPENSER TEST

If the test adapter is not connected (RESIN HIGH) the dispenser test is carried, and indicated as

DISPENSER TEST

Instead of the test adapter the dispenser print is now connected by the 26-pole flat cable. In addition, the motor power supply (30V=), as well as the test cable (see connection diagram for dispenser test) must be connected. For this test a transparent strip (e.g. carrier paper with good transparency) can be operated on the dispenser as endless loop. The running of the motor must be tested visually.
ERROR and NOK are LOW (RELAY OFF).
The following message appears

ERROR TRACTION UNIT

The program now waits for a positive slope at the TUNIT input. The program is continued by opening (closing the switch) and closing the traction unit, and the indication

END LABEL REEL

appears. The program now waits for a negative slope at the DOL input (OUT OF LABEL). After closing the brake spring the following must appear as acknowledgement

ATTN. LABELSTOCK

The program now waits for a positive slope at the LLO input (LABEL LOW). This can occur either by opening and closing the control system for the label stock (option) or by briefly connecting the clamp LLO with GND.

* The next part of the program is carried out as loop for permanent tests. The following indication appears again

DISPENSER TEST

- The NOK relay is briefly pulled up. If necessary, check function with connected continuity tester (contact must close up).

- The following inputs/outputs are connected by luminous diodes (test cable):

OUTPUT	INPUT
OK	CODE
RSTC	NOL
RESOUT	IMPR

First the corresponding input is tested for HIGH status (error message '<SIGNALNAME> NOT HIGH'), then the connected output is set low and the optocoupler cut through. The corresponding luminous diode must now illuminate. The corresponding input is tested for LOW status (error message '<SIGNALNAME> NOT LOW').
If one of the errors DIFS.HW.ERR. 2001-2006 occurs, first check the connection cable.
. If the corresponding LED illuminates with error message '..NOT LOW', the monitor IC is most probably defective.
. If the corresponding LED illuminates with error message '..NOT HIGH', there is most probably a short circuit in the optocoupler TIL 127.
. If the corresponding LED does not illuminate with error message '..NOT LOW', check connection dispenser-monitor and the corresponding pull-up resistances on the monitor.
. If the corresponding LED does not illuminate with error message '..NOT HIGH', check pull-up resistances monitor and monitor IC U22.

DISP.HW.ERR.	MEANING
2001	CODE NOT HIGH
2002	CODE NOT LOW
2003	NOL NOT HIGH
2004	NOL NOT LOW
2005	IMPR NOT HIGH
2006	IMPR NOT LOW

- The inputs for the goods scanners GSC1 + GSC2 are now checked. As the sender is not activated, both inputs should be LOW (ray interrupted, input active). In the case of error messages (2007,8) check goods scanner receiver (both LED's should illuminate) and connection. After activating the relay (goods scanner sender is switched on, sender LED should illuminate) the irputs are tested for HIGH. The luminous diodes of the goods scanner receiver should now be extinguished.

If not, check sender receiver alignment as well as goods scanner.

DISP.HW.ERR.	MEANING
2007	GSC1 NOT LOW
2008	GSC2 NOT LOW
2009	GSC1 NOT HIGH
2010	GSC2 NOT HIGH

- The correct setting of the monitor IC U19 (flip-flop) is checked (DISP.HW.ERR.2011).
  The sender of the optical label scanner is then switched on and off and checked whether the flip-flop U19 has been reset (ERR.2012). (Simulation light-dark transition same as label grid).
  In the case of errors: test optical label scanner.

DISP.HW.ERR.	MEANING
2011	LSC NOT HIGH (U 19)
2012	LSC NOT LOW (U 19)

- The READY HIGH is awaited (see built-in LED in dispenser)
  Indication: 'NOT READY'

- The dispenser step motor is controlled by the signals FEED and CLOCK with approx. 2500 Hertz. The traction unit makes a ½ turn and all the peripheral units installed are checked at the same time. FEED is then activated 10 times for 50 ms with a break of 50 ms. In this way it is possible to check whether adapter and printer can be activated with a cadence of 10/sec.
  The loop is repeated.

DISPENSER CONNECTIONS FOR DISPENSER TEST

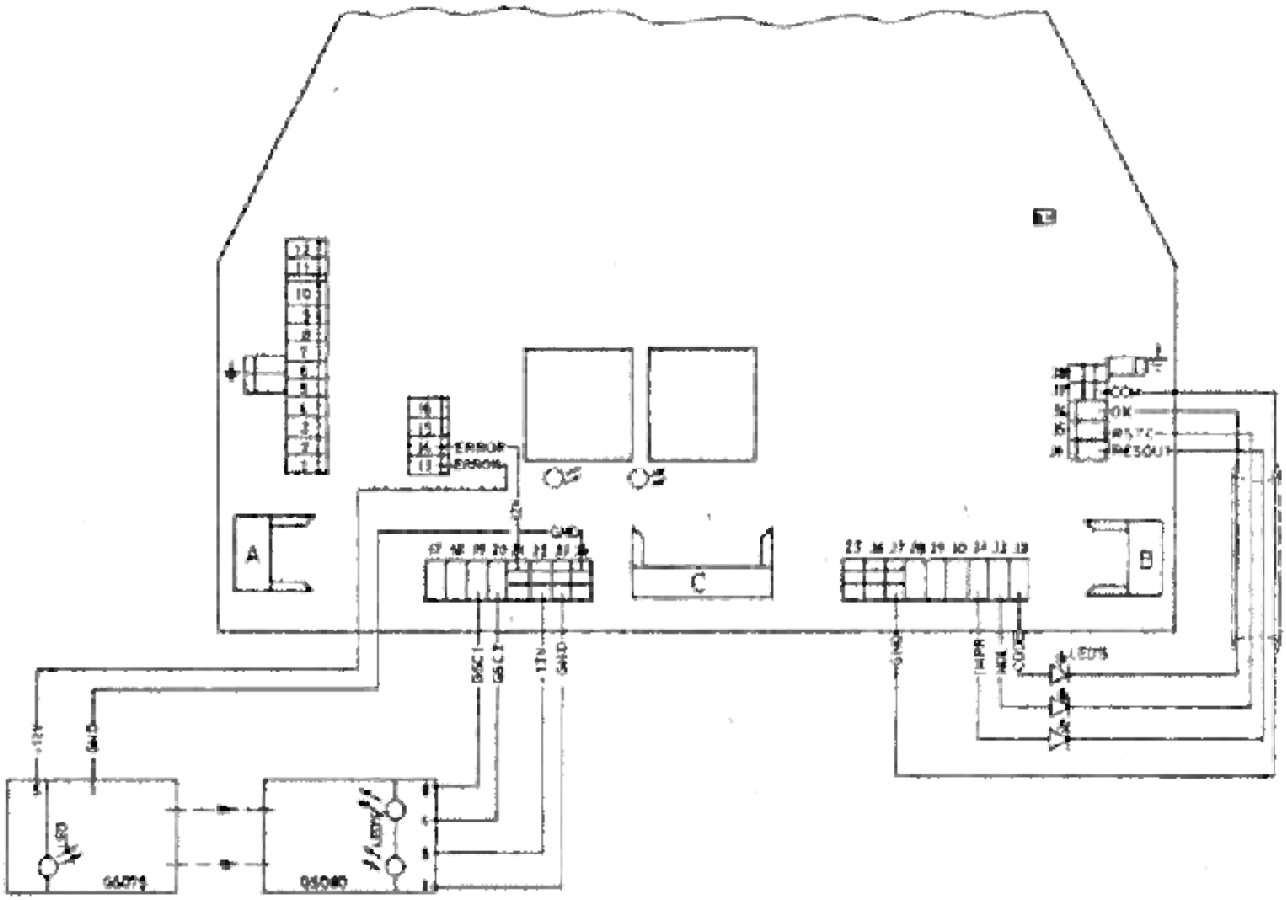

THE DISPENSER TEST CAN ONLY BE CARRIED OUT IF AT LEAST THE FOLLOWING PERIPHERAL UNITS ARE CONNECTED:

- Optical label scanner GS073 and GS074,
- Measuring goods scanner GS079 and GS080,
- Label stock warning (control), and cable connection GND-LLC resp.
- Connections as per the above diagram.
- Set magnetic flap adapter (if available) to minimum press-on time.
- Set flat printer (if available) to medium printing time (factory-set).
- Connect dispenser to monitor (25-pole flat cable).
- DIL-switches 7 and 8 on the rear panel of the monitor must be "ON".

5.2 NV-RAM initialization

The separately available initialization EPROM 'C85INIT' tests and initializes the NV-RAM's.

Each RAM-cell of each individual NV-RAM pair is tested for legibility and writability. If an error occurs, an error message with the corresponding address is written on the display.

At the end the major parameters are added to each program number with a standard value.

Subsequently, direct continuation in the program-mode is possible.

Execution in practice

Turn off the power switch, plug in the 'C85INIT' according to the sketch. Do not forget to plug in the jumper behind the EPROM correctly!!!

Plug in jumper as shown in the sketch (depending on EPROM-type, also observe diagram on the print next to the EPROM).

The C85INIT-EPROM is a type 2516 EPROM and must be inserted according to the accompanying sketch.

Turn on power switch, test begins automatically. The RAM's are tested in pairs. Each inserted NV-RAM pair is acknowledged with a corresponding indication. By pressing the "CLR" key it is possible to jump to the next NV-RAM pair.
When all the NV-RAM's are inserted, the messages read as follows:

```
'STANDARD RAM OK!'
'OPT1     RAM OK!'
'OPT2     RAM OK!'
'TEXT     RAM OK!'
'SFG      RAM OK!'
```

If one NV-RAM pair has not been inserted or the first address is already defective, neither an "OK" nor an "ERROR"-message appears.

If the following error message appears on the display:

'MEMORY ERR. XXXX' (XXXX=Address)

this means the NV-RAM pair on this address is defective. By pressing the "CLR" key it is possible to jump to the next NV-RAM pair.

'' PARAM. STORED''

means that the program parameters have been stored as non-volatile. (After POWER OFF or voltage drop the data remains stored in the RAM's.)
Subsequent to this message it is possible to continue in the program-mode by pressing the "CLR" key, to look at further RAM-contents by hand or to change parameters.

INITIALIZATION OF SPECIAL PROGRAMS (SPG)

The possibility exists to carry out a special program immediately before or after the dispensing process. The hardware provides for an NV-RAM pair at the addresses from >2400 to >24FE. In order to jump to the beginning of the special program, each program number has two pointers:
(also refer to technical handbook chapter 'K3' and 'L')

SPG pointer 1: at the address >XXXX + >001E
SPG pointer 2: at the address >XXXX + >003E

>XXXX is the start address of the parameters of a certain program number (Hex 2000, 2040, 2080 etc.).

The start address of the special program must be written into this pointer.

5.3 Program-mode

PGMD (program-mode) enables the input of key values, the control of individual addresses in the NV-RAM and the programming of the monitor, in particular the input of USER programs consisting of a maximum of 126 words.

These programs are to stand in the NV-RAM option

SPG >2400 - >24FE

and start at the address >2400. It is important to note that the last two words of this range (>24FC, >24FE) are cancelled by the main program (INI3) on turning the power ON. These are defined as shift registers.
The USER programs can differ for each dispensing program: the NV-RAM option "TEXT" can be used as additional program memory. USER programs can be carried out before and/or after the dispensing program, WP=WP1.
They are executed when:

SPG POINTER = >0000
SPG POINTER = output address of the corresponding USER program resp.

SPG POINTER 1 is called by program SCAN1, SPG POINTER 2 by CONTRD. The return is to be terminated by B >0220 and B>57A.

PGMD is activated when DIL-switch 2 on the rear panel of the monitor is on power "ON" (up).
Shown on the LCD-display as:

ADR:XXXCOD:YYYY

Definition of key functions:

0 - F	: HEX code; is inserted in the digits YYYY from the right.
CLR	: Cancels address and code.
MEM	: The word shown in the field "COD" is interpreted as address, displayed in the field "ADR" and the corresponding code indicated in the field "COD".
ENTER(↵)	: Stores the code at the indicated address, shows the next address to follow and the corresponding code.
STORE	: Stores all the data in the NV-RAM's as non-volatile.

The data input (programming) is terminated with STORE. The program is carried out after DIL-switch 2 is "OFF" (down) and new Power "ON".

Additional applications:

Setting PASSCODE and PROCODE
Setting STORECOUNTER (storage counter)
Defining SOFTKEYS
Checking PROM and RAM-contents

Example: Input of key values:

PASSCODE — Address in NV-RAM: >208E
- after turning on the device (Power ON) a password is immediately requested.

PROCODE — Address in NV-RAM: >201C
- when programming the device a key value is requested after the first "SELECT FUNCTION" call and subsequent touching of any function key.

Turn off device (monitor), turn on DIL-switch 2 at the rear panel of the monitor and the monitor ("ON").

Order of keys:	Displays:	
	ADR:0000COD:0000	
2,0,1,C	ADR:0000COD:201C	Enter the address from the PROCODE "201C". After every input error (mistype) e.g. "9" is pressed instead of "1", the four-digit value (code) is to be retyped.
"MEM"	ADR:201CCOD:1984	After pressing the "MEM" key, the code is interpreted as address, moved to the right, shown in the "ADR" field and the corresponding value indicated in the field "COD". In this case the old code, e.g. "1984" is shown.

A,0,5,B	ADR:201CCOD:A05B	Input of the new code "A05B". The input must consist of a four-digit value in hexadecimal representation (figures 0-9, alpha-signs A-F). - Cancellation of the PROCODE and PASSCODE value resp: at the corresponding address replace the code (value) by four times zero (0000).
"↵"	ADR:201ECOD:----	The PROCODE-value has been stored and the next address indicated with the corresponding code (value). If the input of the PASSCODE-value is also required, enter the ADDRESS "20BE" now and after pressing the "MEM" key enter the "PASSCODE"-value, e.g. "135A" and press the "↵" key. Otherwise the following appears:
"2nd", "STORE"	PROGR.STORED	The new values (key values have been stored as non-volatile).

Turn off DIL-switch 2 and device (monitor), turn on device (monitor) again (Power ON).
If the message "?KEY VALUE?" follows, enter the corresponding value (code), in this case the PROCODE-value "A05B". After entering the PROCODE-value the "SELECT FUNCTION" message appears again on the display. The desired function key can now be pressed. The "KEY VALUE"-input remains stored as long as the device is switched "ON".

A. APPENDIX

A.1 Technical Data

MONITOR

µP-control	16 bit Texas Instruments processor: TMS 9995, EPROM 8K x 8, non-volatile memory 4K x 8, expandable to 1 4K x 8.
Display Keyboard	16-digit alphanumeric LCD-display Alphanumeric foil keyboard with acoustic answer-back signal
Acoustic signal transmitter	Internally adjustable volume, max. 60 dB (A) at a distance of 1 m
Line outputs	Supply connection (for flat printer, magnetic flap adapter), max. 5A + 40 V, 0.3A rectified (traction unit) ~28 V, 3.5A alternating voltage (rotary printer) ~20 V, 16A alternating voltage (needle printer)
Power supply	~100/110V or 220/240V ± 10% 50/60 Hz
Power consumption	No-load operation 50 VA Dispensing approx. 200 VA, max. 500 VA
Inrush current	10 A, 1 second
Permissible ambient temperature	0 - 50° C
Permissible relative humidity	15 - 90 % without condensation
Type of protection	IP 30 IP 41
Dimensions (w/h/d)	220x100x290 mm
Weight	5.6 kg

TRACTION UNIT

System	COLLAMAT 8510	COLLAMAT 8520
Design	right/left	right/left
Dispensing speed	1-50 m/min.	1-30 m/min.
Min. band-pass width	10 mm	10 mm
Max. band-pass width	95 mm	160 mm
Min. label length	10 mm	10 mm
Positioning tolerance G2	± 0.4 mm	± 0.6 mm
Material supply-Ø	max. 350 mm	350 mm/max.10 kg
core-Ø	42 mm	42 mm
Unwinder Midi	250/350 mm, with spring pendulum and automatic brake	
Rewinder	takes up carrier paper from material supply roller of Ø 250 mm	
Drive	5-phase step motor	
Power supply	40 V =/3A non-directional direct current (motor) 12 V =/300mA direct current	
Power consumption	approx. 140 VA	
Type of protection	IP 41	
Permissible ambient temperature	0 - 50°C	
Permissible relative humidity	15-90%, without condensation	
Noise level	70 dB A at a distance of 1 m	
Dimensions (w/h/d)	266x245x243 mm including projecting parts, excluding unwinder	266x245x308 mm
Weight	12 kg	14 kg

MAGNETIC FLAP ADAPTER

Design	right/left
Band-pass width	35, 95, 160 mm
Adapter angle	adjustable with snap-in locking
Restoring spring resistance	adjustable
Adapter press-on time	adjustable
Label scanner	with or without integrated label scanner for 95 mm and 160 mm band-pass width. (35 mm band-pass width without)
Max. cadence	10 labels per second for 35 mm adapter
Max. flap swing angle	15°
Torque	42 Ncm
Power supply	110 V or 220 V ± 10%, alternating current 50 / 60 Hz 12V=/30mA direct current through 14-pole flat cable
Power consumption	10x VA
Permissible ambient temperature	0 - 50°C
Permissible relative humidity	15 - 90%, without condensation
Dimensions (l/w/h)	95 mm band-pass width: approx. 270x234x87 mm 160 mm band-pass width: approx. 270x298x87 mm including projecting parts
Weight	approx. 1.9 kg and 2.2 kg resp.

GOODS SCANNER

G+S IR-scanner:

Max. distance between sender and receiver	600 mm
Parallelism sender/ receiver	± 3 mm
Power supply	12 V, direct current

FLAT PRINTER

System	FDW 95	FDW 160
Max. band-pass width	95 mm	160 mm
Max. printing area	32x32 mm	32x32 mm
Max. printing cadence	approx. 21'000/h	approx. 21'000/h
Dimensions w/h/d in mm	135x300x215	135x300x275
Weight	4.3 kg	5 kg
Power supply	110/220 ±10% alternating current 50/60 Hz 12V⎓/30mA direct current through 14-pole flat cable	
Power consumption	200 VA	
Type of protection	IP 41	
Permissible ambient temperature	0 - 50°C	
Permissible relative humidity	15 - 90% without condensation	

ROTARY PRINTER

System	RDW 95	RDW 160
Design	right/left	right/left
Band-pass speed	1-30 m/min	1-30 m/min
Max. band-pass width	95 mm	160 mm
Max. printing width	95 mm	160 mm
Max. printing length	200 mm	200 mm
Printing diameter of cylinder	69 mm	69 mm
Inking roll diameter	30 mm	30 mm
Print shift in printing direction by turning knob	± 8 mm	± 8 mm

The cylinder circumference can be divided in two times 1/2 or three times 1/3 printing cycles (higher cadence).

Drive	5-phase step motor	
Power supply	28V~/2A alternating current 12V=/300mA direct current through 14-pole flat cable	
Power consumption	approx. 60 VA	
Type of protection	IP 41	
Permissible ambient temperature	0 - 50°C	
Permissible relative humidity	15 - 90% without condensation	
Dimensions w/h/d in mm	184x264x295	184x264x317
Weight	7 kg	8 kg

A2. Abmessungen - Systemaufbau

A2. Dimensions - design of the system

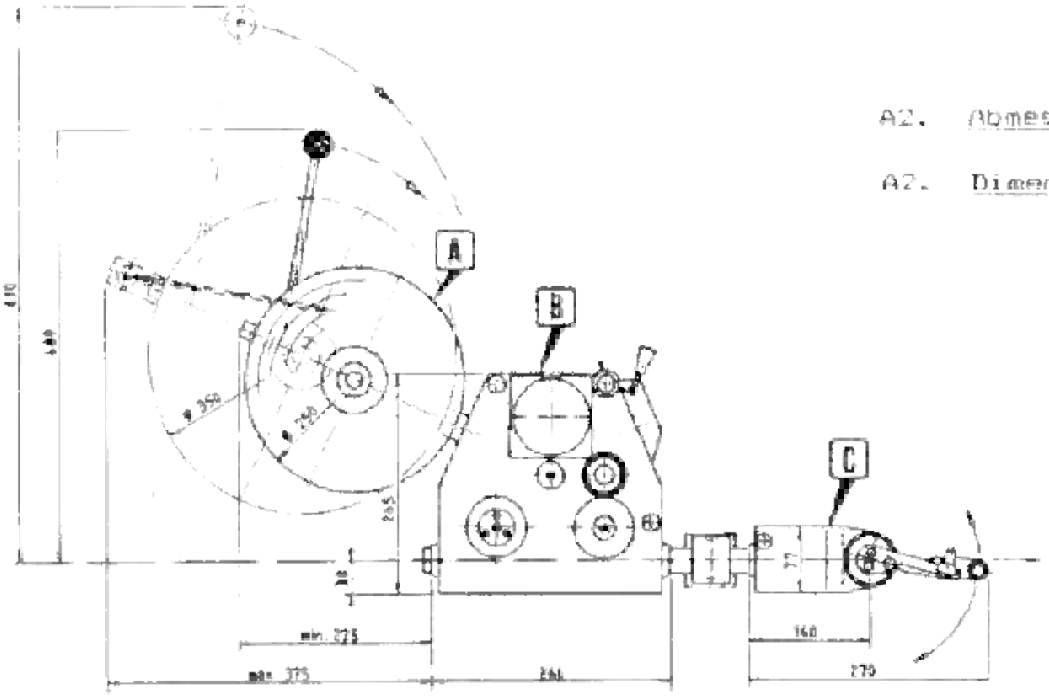

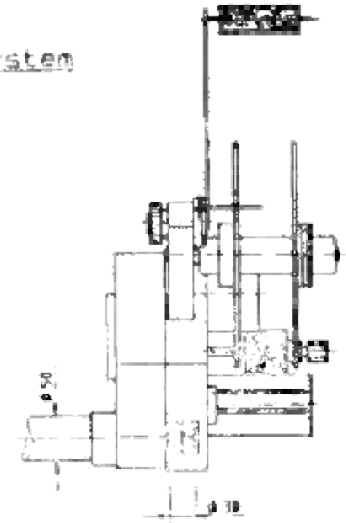

A) Abroller
B) Spender C 85xx
C) Klappenadapter
D) Für Deckeldemontage
E) Feste Spendekante

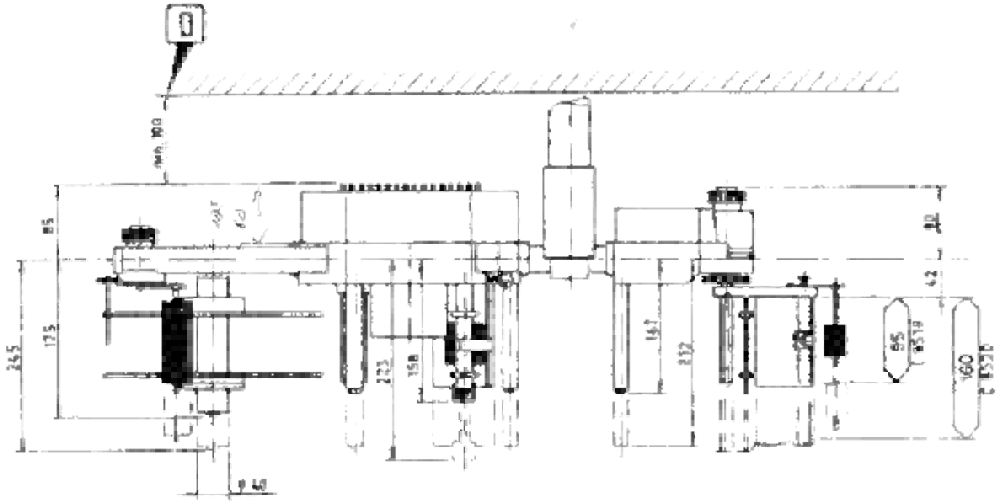

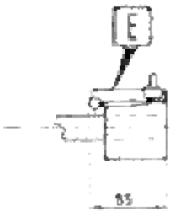

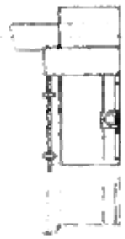

A) Unwinding spindle
B) Dispenser C 85xx
C) Flap adapter
D) For lid dismantling
E) Fixed dispensing edge

- Für Deckelabmontage
- Pour le démontage du couvercle
- For lid dismantling

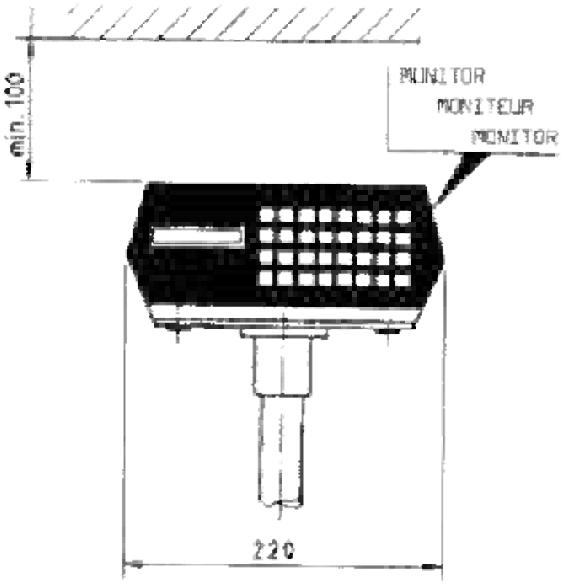

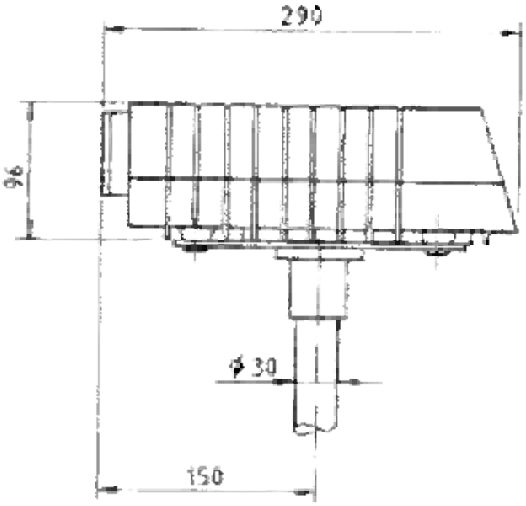

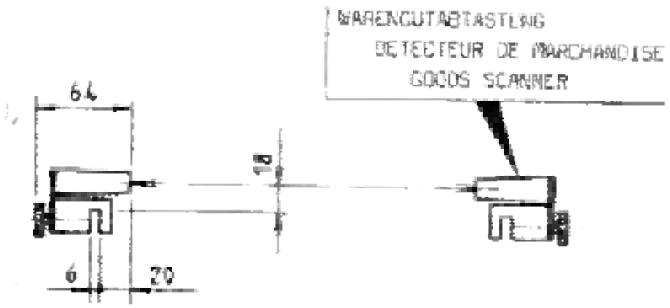

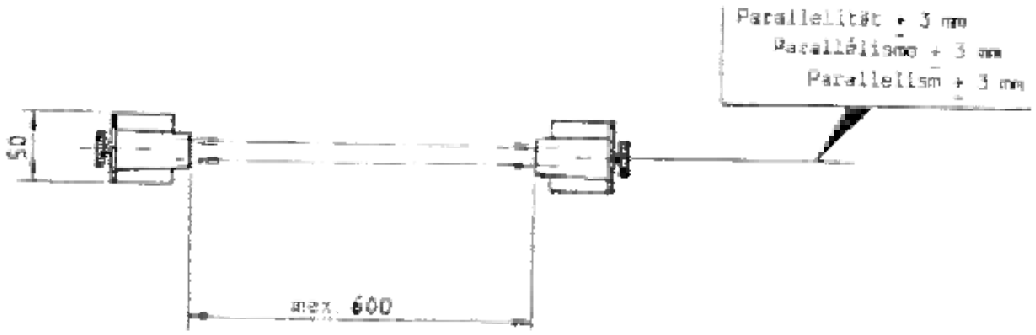

A3. Program-name key

C 85 X X Y. Z

XX	:	10	C8510
	:	20	C8520
Y	:	E	English display texts
		D	German display texts
		F	French display texts
		I	Italian display texts
Z	:	Ø	program version number
		1	
		2	

A4. Error messages

ADJ OUT OF RANGE	Predispensing too large, the process is automatically repeated.
ADJ NOT SET	With "ADJ" the label length is determined and the predispensing entered. The predispensing is first entered before a label is dispensed with "DISP".
ADR:0000COD:0000	The DIL-switch 2 on the rear panel of the monitor is "ON". Device is in the PG-mode. Must normally be "OFF".
ATT. GOODS DIST.	Insufficient distance between goods. Too large suppression of goods scanner (see chapter 4.2.2). - eliminate cause of trouble with: "CLR".
ATT. GOODS SPEED	The goods speed is outside the permissible limits. - Change speed of goods.
ATTN. LABEL STOCK	Insufficient supply of labels, or the scanner lever has swung out. - Change label reel occasionally
CHECK LABELSCAN	The optical label scanner is not adjusted (see control-LED); cannot be evened out due to: - too thick carrier paper; - incorrect alignment of label interspace; - poor side alignment; - dirtiness; - the mechanical scanner is not adjusted (refer to appendix A4.1).
RELEASE CBS10D.0	DIL-switch 1 on the rear panel of the monitor is "ON". The software version is indicated. DIL 1 must normally be "OFF".
DIL-SWITCH TEST	Only in test-mode (DIL 3 is "ON"). The switches located on the rear panel of the monitor are being tested. Refer to chap. 5.
!DISPENSER TEST!	Only in test-mode (DIL 3 is "ON"). The dispenser and the peripheral units are being tested. Refer to test operations, chapter 5.1- The DIL-switch must normally be "OFF" (down).
DISP.HW.ERR.----	Hardware error of dispenser or peripheral equipment. Refer to test operations, chapter 5.

END LABEL REEL

The label reel is empty. Only in label stock control (option).
- Insert new label reel.

ERROR PROGR.NR.

The program number entered is not acceptable.

NV-RAM assembly	Perm.progr.no.
Standard	1 - 4
+ option 1	1 - 8
+ option 1;2	1 -12

ERROR SPEEDLIMIT

The speed entered is outside the permissible speed limit.

ERROR SYNCHRONI.

Irregularities in label feed: label missing on carrier paper
- pressed screen not removed
- label web blocked
- slip in traction unit
- label scanner not working
- label web torn

ERROR TRAC.UNIT

The traction unit is open. Carrier paper is caught in the traction unit.

!KEYBOARD TEST!

Only in test-mode (DIL 3 is "ON"). The monitor is in the test mode, the keyboard is being tested. Refer to test operations, chapter 5. The DIL-switch 3 must normally be "OFF" (down).

!MONITOR TEST!

Only in test-mode (DIL 3 is "ON"). The monitor is being tested. Refer to test operations, chapter 5. DIL-switch 3 must normally be "OFF" (down).

NO DATATRANSMIS.

Data transmission to printer not possible. Printer is switched off or not available.

!NOT READY!

Peripheral equipment not ready for dispensing process. The rotary printer cylinder is not in starting position, the cadence for flat printer is too high.

PASSWORD PLEASE?

The software keyholder is activated
-> enter password, also refer to chap. 5.3.

SYSTEM ERRORXXXX	The microcomputer has detected a temporary system error. - Turn off device (monitor) and turn on again -> if the error arises again, carry out test with testing device. Refer to test operations in chapter 5, as well as troubleshooting, appendix A4.
TRANSPARENCY	Only in test-mode (DIL 3 is "ON"). The circuit of the sender of the optical label scanner is being tested. Refer to test operations in chapter 5. The DIL-switch 3 must normally be "OFF" (down).

SYSTEM ERRORS

	SYS.ERROR NUMBER	PROGR. SOURCE	EXPLANATION
SYSTEM.....	0101	IN11	PP ON CHIP RAM OR NV-RAM (STANDARD) NOT OPERABLE
	0102	IN12	KEYBOARD NOT OPERABLE
	0103	IN14	PROGRAM NUMBER NOT FOUND OR NV-RAM NOT OPERABLE
	0104	NOT DEF.	MACRO INSTRUCTION DETECT (MID): ILLEGAL OP CODE FOR TMS 9995
	0105	NOT DEF.	NON MASKABLE INTERRUPT; NOT USED
	0106	HEXBCD	OVERFLOW ON CONVERSION
	0107	PRTX	DATATRANSMISSION DISTORTED

	MON.HW.ERR.	
MONITOR.....	1001	IMPR NOT HIGH
	1002	NOL NOT HIGH
	1003	IMPR NOT LOW
	1004	NOL NOT LOW
	1005	CODE NOT HIGH
	1006	CODE NOT LOW
	1007	TUNIT NOT HIGH
	1008	TUNIT NOT LOW
	1009	LLG NOT HIGH
	1010	LLG NOT LOW
	1011	OOL NOT HIGH
	1012	OOL NOT LOW
	1013	READY NOT HIGH
	1014	READY NOT LOW
	1015	GSC2 NOT HIGH
	1016	GSC2 NOT LOW
	1017	GSC1 NOT HIGH
	1018	GSC1 NOT LOW
	1019	LSC NOT HIGH (*LS114)
	1020	LSC NOT LOW (*LS114)
	1021	LSC NOT LOW (*LS114)
	1022	LSC NOT HIGH (*LS114)

DISPENSER.....	I-DISP.HW.ERR.	
	2001	CODE NOT HIGH
	2002	CODE NOT LOW
	2003	NOL NOT HIGH
	2004	NOL NOT LOW
	2005	IMPR NOT HIGH
	2006	IMPR NOT LOW
	2007	GSC1 NOT HIGH
	2008	GSC2 NOT HIGH
	2009	GSC1 NOT LOW
	2010	GSC2 NOT LOW
	2011	LSC NOT HIGH (*LS114)
	2012	LSC NOT LOW (*LS114)

TROUBLESHOOTING

	Fault	Cause / Clearance
Power supply	No message on the LCD-display, mains switch on monitor does not light up.	Mains cable is not connected or POWER-switch not turned on. * Main fuse behind the POWER-switch is defective.
	No message on the LCD-display, mains switch (POWER-switch) is ON and illuminated.	* The work-preselection number is set at zero. Refer to operating instructions, chapter 3.7.
	Message on LCD-display, with VW:...AZ..., the power switch is illuminated, no stop on traction roller. During dispensing process error message appears: ERROR SYNCHRONI	* Traction unit print not properly connected. Refer to chapter 3. * Traction unit fuse on monitor print defective. Refer to chapter 3.3.2, as well as appendix A6, A7.

Synchronization error	Irregularities in label feed, the following message appears on the LCD-display: ERROR SYNCHRONI	* Label missing on carrier paper. * Pressed screen not removed. * Slip in traction unit, step motor is losing step. - Refer to connection diagram, chapt. 3.4, as well as appendix A6, A7. - Check traction unit fuse on monitor print. - Check supply voltage, +30V. - Traction unit print defective -> replace. * Label scanner not working: a) Mechanical label scanner: - Check whether properly connected, chapter 3.5 and 3.4.1. - Adjust as explained in chapter 3.3.2 of operating instructions. - Carry out test operation with test adapter, chapter 5. b) Optical label scanner: - Check whether properly connected, chapter 3.5 and 3.4.1. - Adjust as explained in chapter 3.3.1 of operating instructions. - Carry out test operation with test adapter, chapter 5. * Label web missing * Label length not adjusted. Refer to operating instructions, chapter 3.4.
	Mechanical label scanner: The traction unit stands still after a short period of dispensing, and the following message appears on the LCD-display: ERROR SYNCHRONI	* Sensitivity of scanning head too high. - Refer to operating instructions, chapter 3.3.2. * The scanning head must be made chatter-free - 10µF to be connected between LSC and GND

Synchronization error	Optical label scanner: Label web stops irregularly in the middle of the dispensing process, but no error message appears	* Optical label scanner not properly adjusted. - Refer to operating instructions, chapter 3.3.1. * DIL-switch 4 on the rear panel of the monitor is ON, therefore no error message. - Refer to operating istructions, chapter 3.1. * If the label transparency is greater or equal to the carrier paper, scanning is no longer possible with the optical label scanner, and the mechanical label scanner must be applied. * In a borderline case one can try to set the optical label scanner without the label web (refer to chapter 4.3).
	The goods scanner does not work properly: - Speed-measuring G+S IR-scanner: Goods run through the barrier, and no dispensing process follows. Shortly thereafter, the following message appears on the LCD-display: ATT GOODS SPEED	* Speed-input = 0. - GSC1 and/or GSC2 not connected. Refer to chapter 3.4 and 3.6 as well as to operating instructions, chapter 3.9.1. - Sender or receiver defective. - Carry out test operation with the test adapter (chapter 5). * The scanner must be completely replaced if defective!!!

Systems error messages

System Error Number: 0101	* Can occur in the system initialization phase. The µP-RAM or NV-RAM (standard) is defective or not ready. - Test/initialize NV-RAM with initialization EPROM. Refer to chapter 5.1 and 5.2. - Replace microprocessor TMS 9995.
System Error Number: 0102	* Can occur in the system initialization phase when pressing a key during switching-on (POWER ON) process. * The foil keyboard is defective. - Replace keyboard.
System Error Number: 0103	* The base address of the program in question is not identifiable. - Re-initialize the NV-RAM Refer to chapter 5.1 and 5.2. * NV-RAM not ready or defective. - Replace the NV-RAM and re-initialize. Refer to chapter 5.1 and 5.2.
System Error Number: 0104	* Illegal machine code for TMS 9995. * Special program point 1 and/or 2 set, although no special program existing. - Re-initialize the NV-RAM Refer to chapter 5.1 and 5.2. * Very strong line disturbances - Installation/series connection of external power-line filter * EPROM or monitor print defective. - Replace EPROM or monitor print.

Systems error messages	System Error Number: 0105	* Very strong line disturbances - Installation/series connection of external power-line filter - Check/replace monitor print. Refer to chapter 5.1
	System Error Number: 0106	* Illegal HEX-value in the NV-RAM. - Re-initialize the NV-RAM Refer to chapter 5.1 and 5.2.
	System Error Number: 0107	* Error in peripheral equipment, e.g. rotary printer or flat printer. The READY-signal remains high during switching-on process. If it is pulled down after approx. 100ms and not pulled up after a further 100ms, the message System Error 0107 appears. - Separate peripheral equipment from monitor. Turn monitor on again. If the error message does not appear again, the error lies in the peripheral equipment itself. - Carry out test with test adapter. Refer to chapter 5.

A5. Memory and I/O Map

M E M O R Y - M A P (MAX. 95,K BYTES)

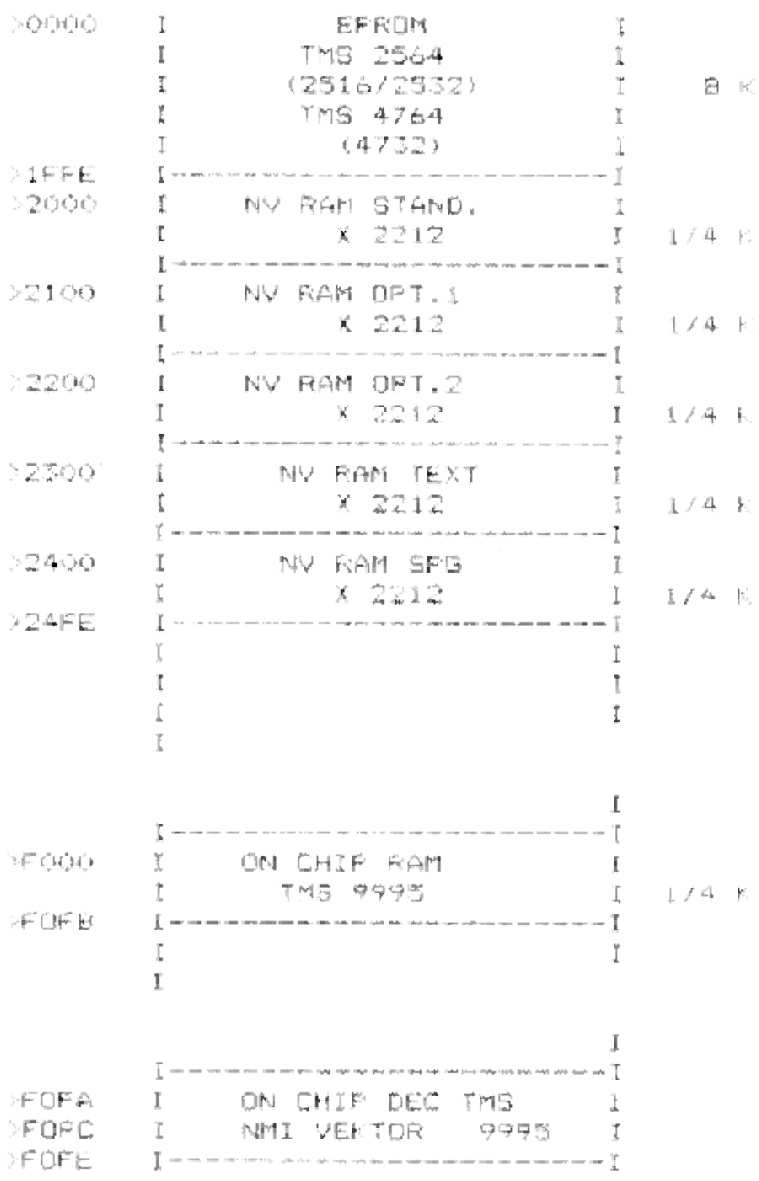

N V - R A M - M A P S T A N D . / O P T. 1 / 2

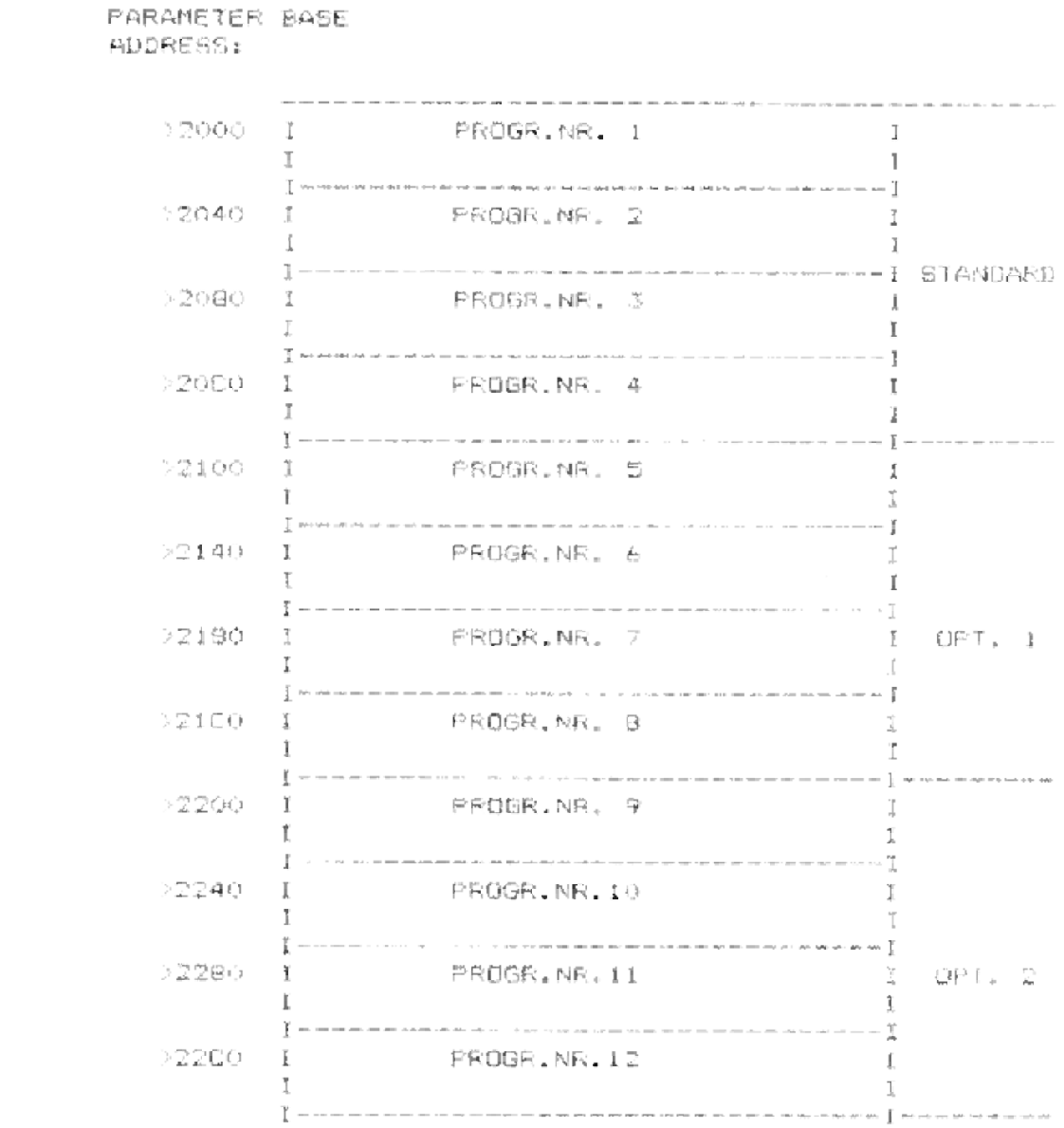

N V - R A M - M A P T E X T / S P G

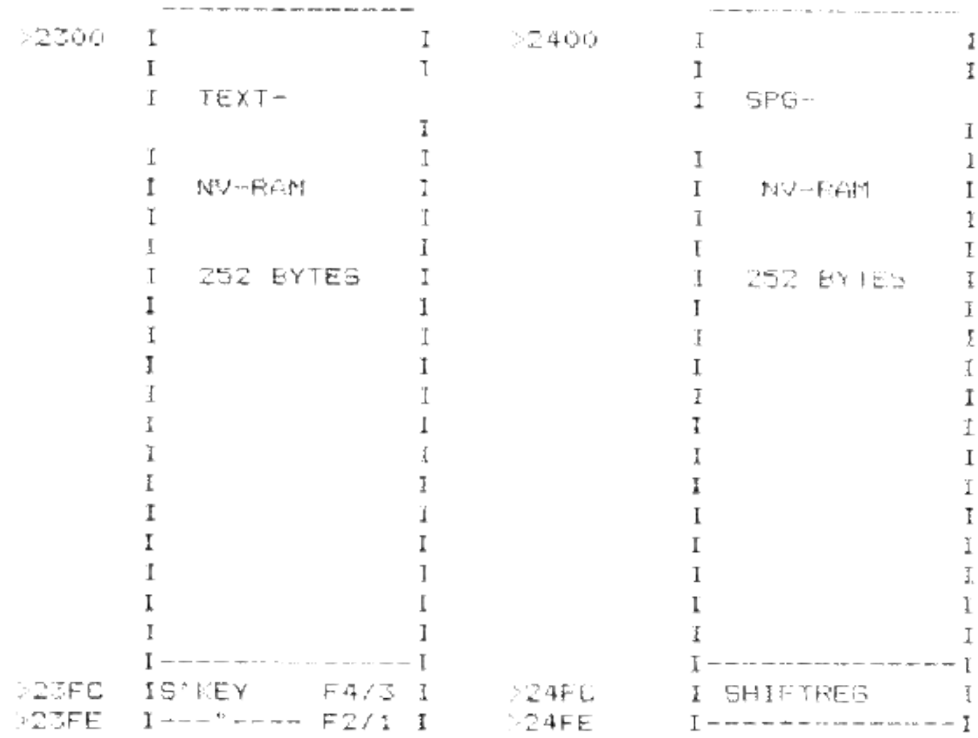

N V - R A M - M A P S T A N D . / O P T. 1 / 2

```
PARAMETER BASE
ADDRESS + OFFSET
                 ------------------------------
          00    I R 0:STEPTIME (COMPUTED)      I
          02    I R 1:STEP UP POINTER          I
          04    I R 2:   --                    I
          06    I R 3:   --                    I
          08    I R 4:   --                    I
          0A    I R 5:LABELLENGTH              I
          0C    I R 6:PCS                      I
          0E    I R 7:ADJ                      I
          10    I R 8:COUNTER/TIMER            I
          12    I R 9:SUPR                     I
          14    I R10:LABELLENGTHCOUNTER       I
          16    I R11:(RETURNADR.)/            I
          18    I R12:(CRUBASE)                I
          1A    I R13:(OLD WP)                 I
          1C    I R14:PROCODE                  I
          1E    I R15:SPG POINTER 1------------I
          20    I POSITION                     I
          22    I    PERIPHERAL                I
          24    I         DEVICES              I
          26    I              OR              I
          28    I IDENTIFICATION               I
          2A    I    LABELLING                 I
          2C    I         TASK                 I
          2E    I------------------------------I
          30    I CT MSW  COUNTER              I
          32    I CT LSW-----------------------I
          34    I PS MSW  PRESET               I
          36    I PS LSW-----------------------I
          38    I FIXED SPEED------------------I
          3A    I 6 BIT TCY---(LEFT BYTE)------I
          3C    I    SPG POINTER 2-------------I
          3E    I ------see footnote-----------I
```

Footnote: EXCLUSIVELY IN NV RAM STAND. OCCUPIED:

```
>201C ; PROCODE
>203E ; STORECOUNTER
>207E ; PARAMETERPOINTER
>208E ; PASSCODE
>2AEE ; NV-RAM-TEST-WORD
```

U S E R A C C E S S I B L E I / O

BASE ADDR. 0020

FUNCTION	I/O	BIT-ADDR.	ACC.LOC.	PURPOSE	I/O-TYPE	STAND.
WRAP-AREA	I	F1	MONITOR	NOT DEF.	A	Y
WRAP-AREA	I	F2	MONITOR	NOT DEF.	A	Y
DIL SW5	I	0C	MONITOR	NOT DEF.	B	Y
DIL SW6	I	0D	MONITOR	NOT DEF.	B	Y
WRAP-AREA	I/O	0F	MONITOR	NOT DEF.	C	Y
CODE	I	12	DISPENS.	NOT DEF.	D	Y
NOL	I	13	DISPENS.	NOT DEF.	D	Y
IMPR	I	14	DISPENS.	NOT DEF.	D	Y
RESIN	I	15	DISP/PER	NOT DEF.	D	Y
RED	O	49	DISPENS.	NOT DEF.	E	Y
ERROR	O	4A	DISPENS.	CONVEYOR ON/OFF	F	Y
NOK	O	4B	DISPENS.	WARNING LABELLOW	F	N
OK	O	4C	DISPENS.	NOT DEF.	G	Y
RSTC	O	4D	DISPENS.	NOT DEF.	G	Y
RESOUT	I/O	4F	DISP/PER	NOT DEF.	G/E	N/Y

I / O - T Y P E S

A : TTL-INPUT
B : DIL-SWITCH ON BACKPANEL
C : TTL-INPUT/OUTPUT
D : INPUT FOR MICROSWITCH OR OPENCOLLECTOR TRANS.
E : OPENCOLLECTOR 12 V, 40 mA max.
F : RELAIS 250 V, 5 A max.
G : OPTOCOUPLER 24 V, 50 mA max.

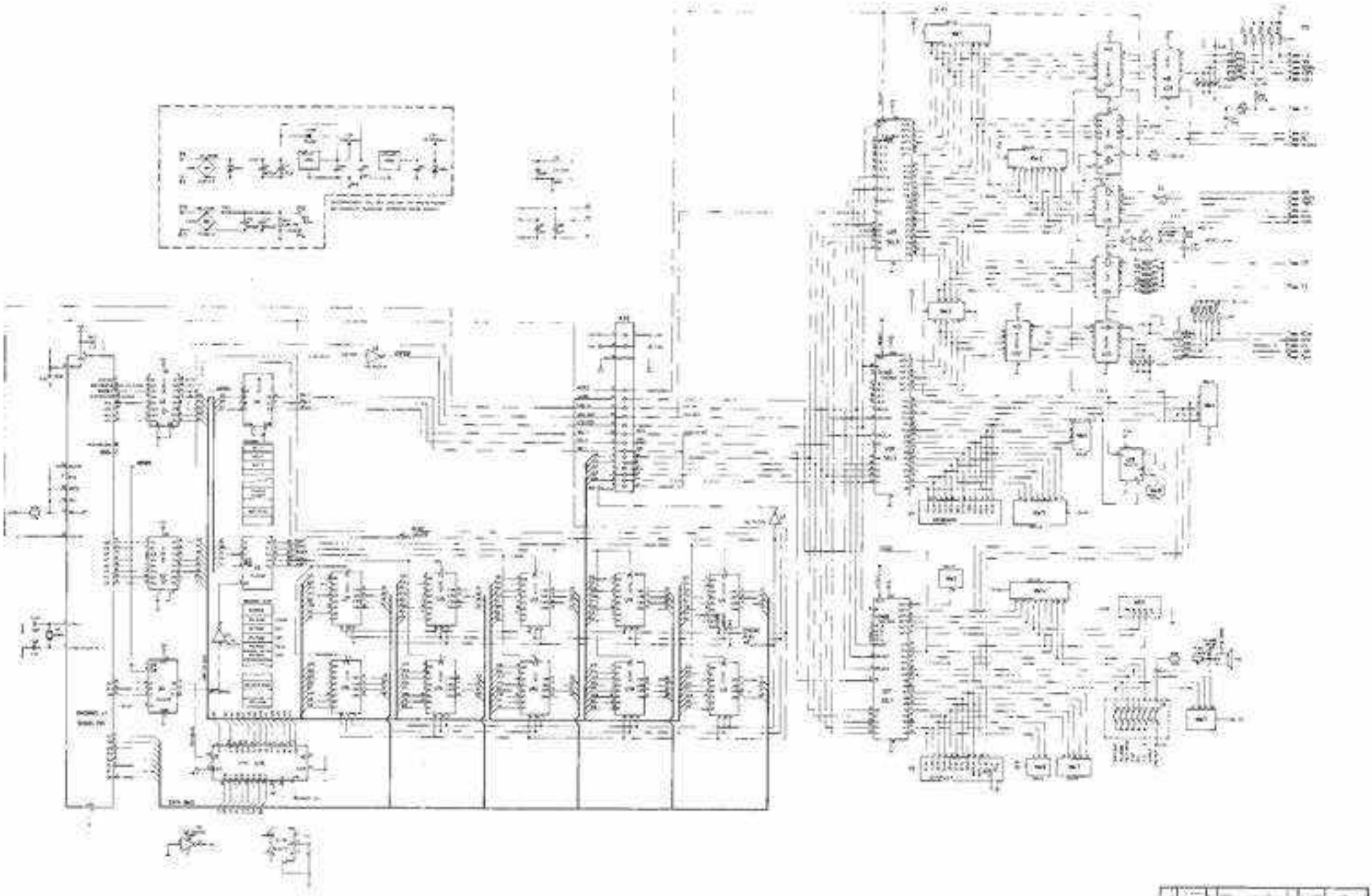

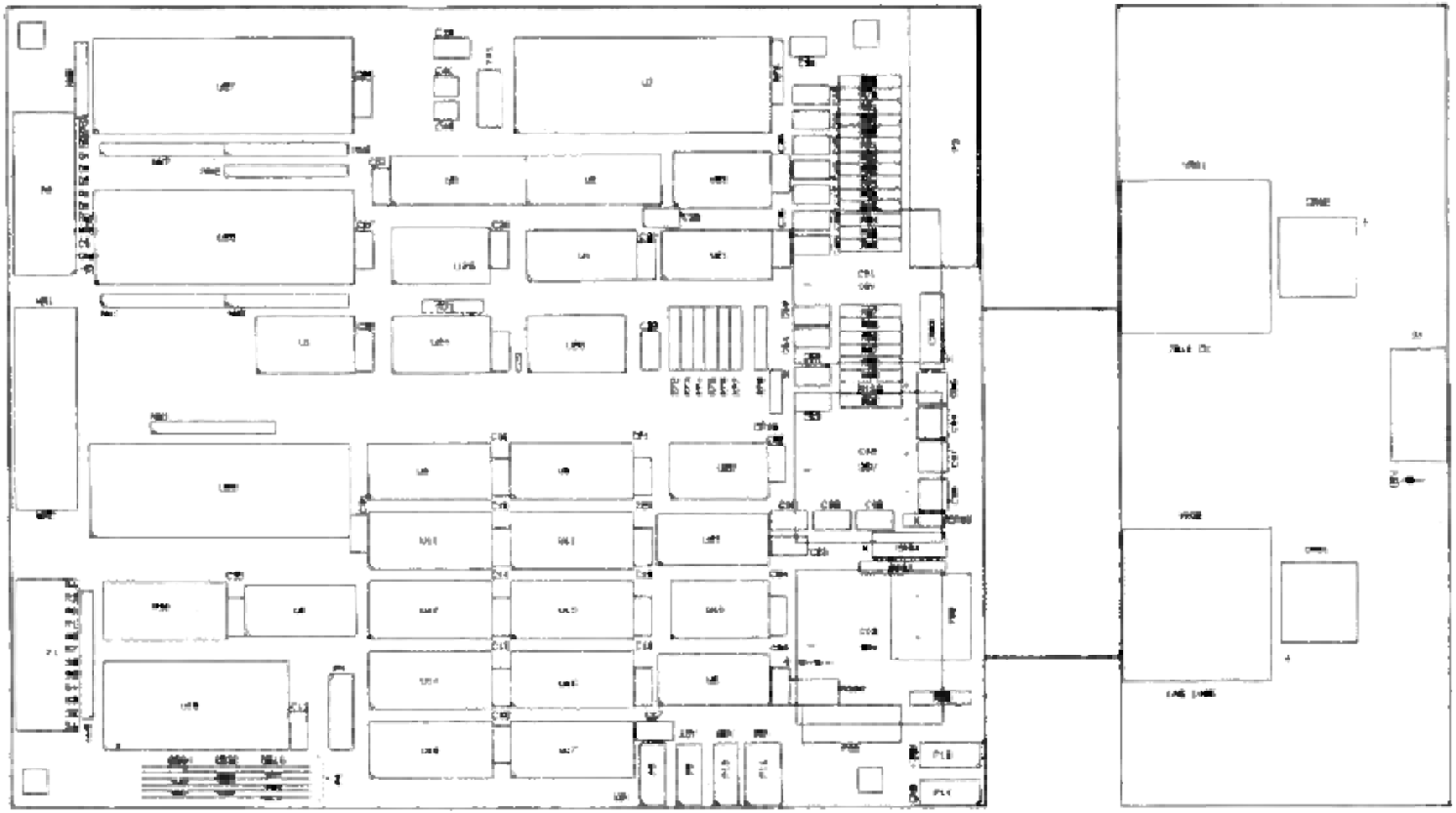

MONITOR	
BESTÜCKUNGSPLAN	
GS 0.718	
Stahl + Schaffner AG Aesch Basel	2 /50/ 2 – 319

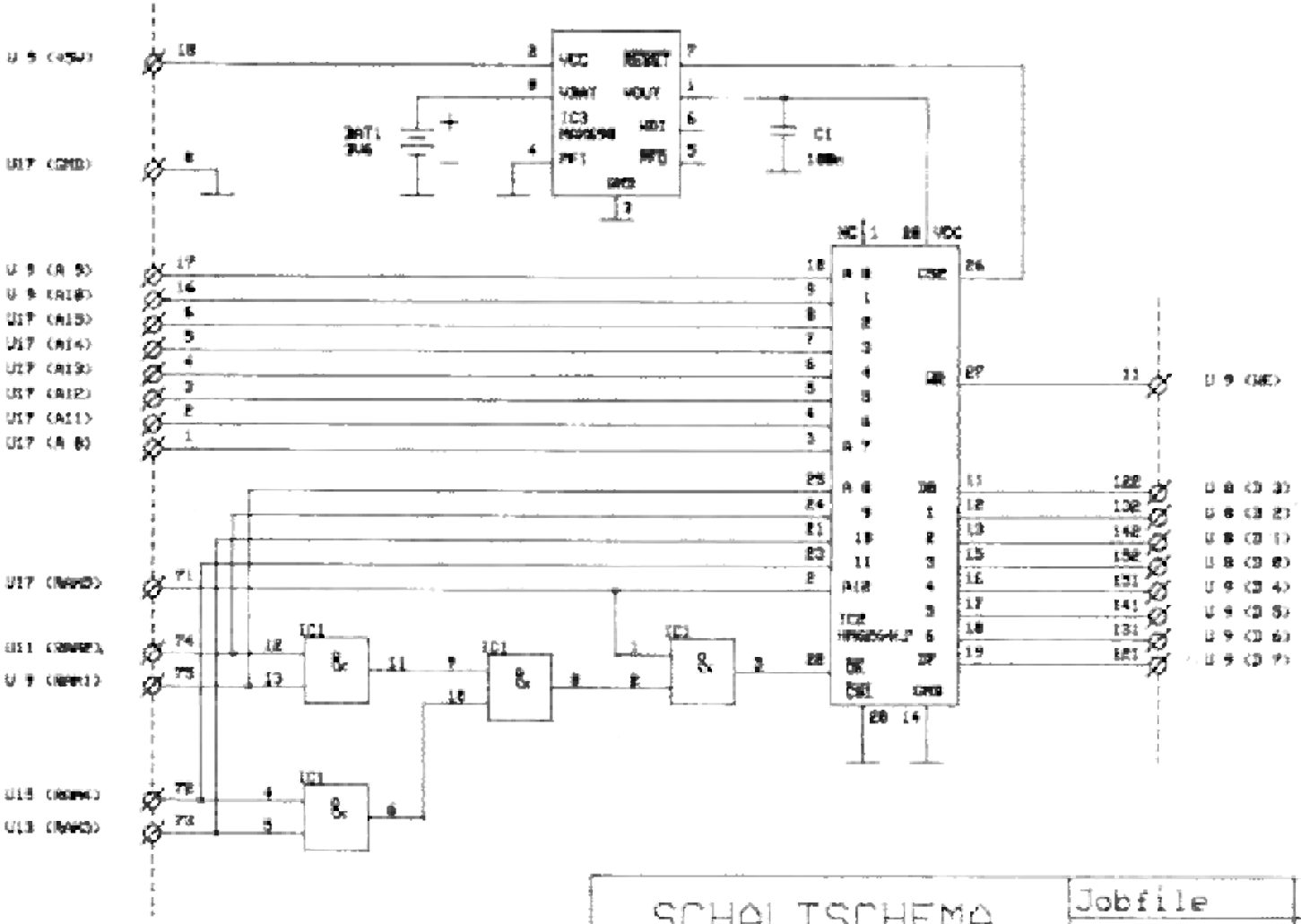

SCHALTSCHEMA	Jobfile	GS119P1.FSH
	Printnummer	GS 119
NV-RAM-PRINT Monitor C 8500	Layout	dh
	Datum	19.07.89
	Änderungen mit Index	

Guhl+Scheibler AG CH-4147 Aesch

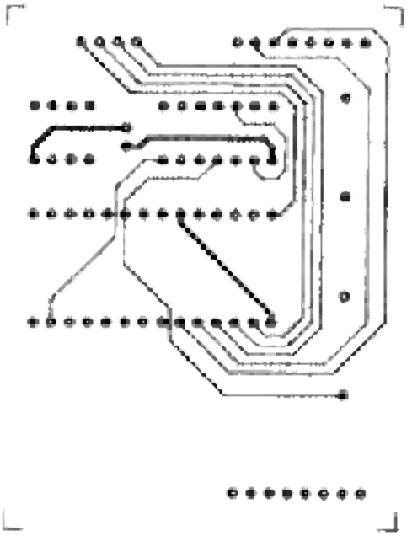

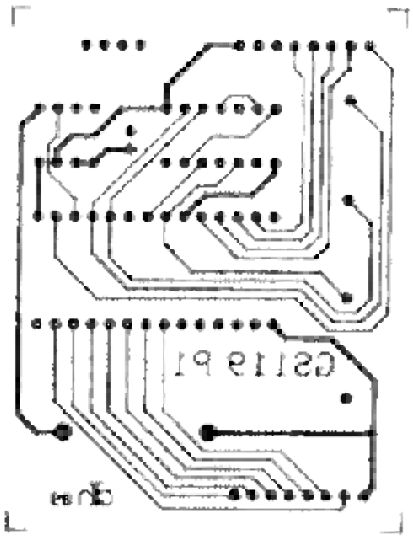

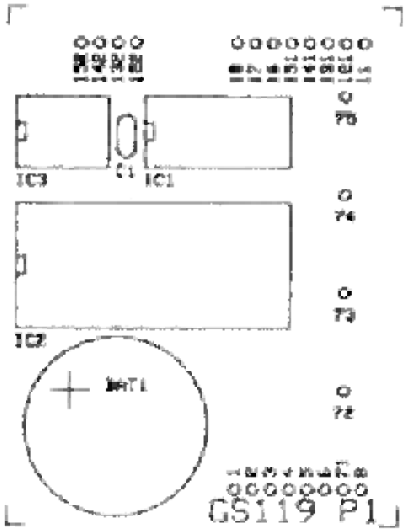

NV-RAM-PRINT Monitor C 8500	Jobfile	GS119P1.FLA
	Printnummer	GS119
	Layout	dh
	Datum	20.07.89
	Änderungen	

Guhl+Scheibler AG CH-4147 Aesch

EINBAU RAM-CARD mit BATTERIE in C85

Lage auf dem C85-Print

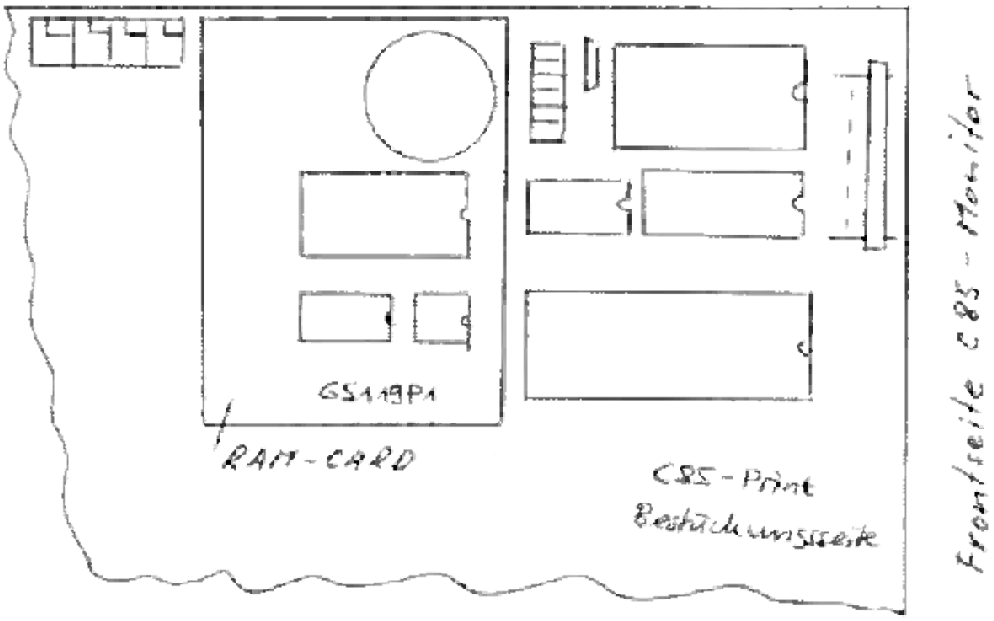

Position der Steckerstifte im IC-Sockel

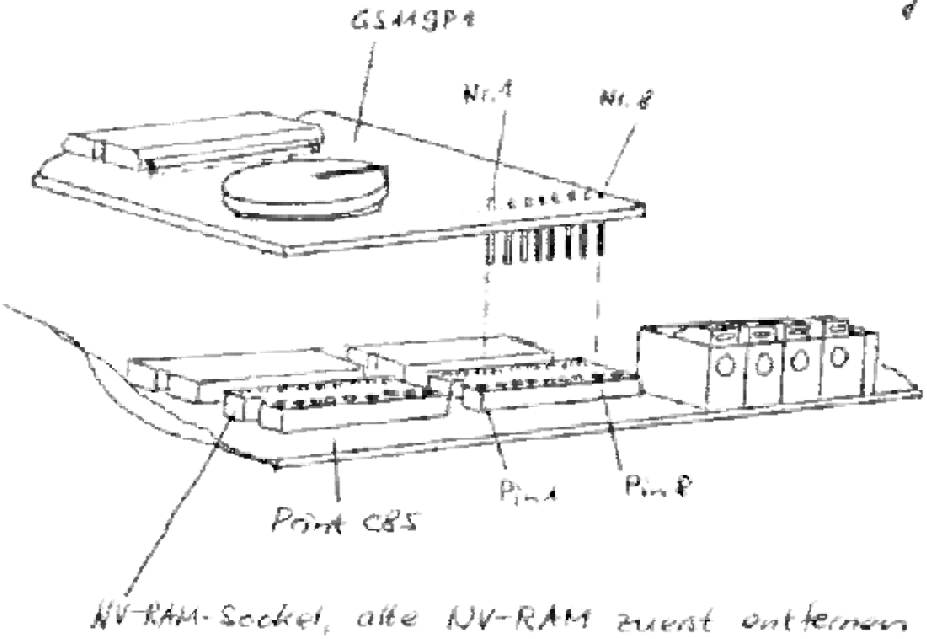

NV-RAM-Sockel, alle NV-RAM zuerst entfernen

Achtung: RAM-CARD nicht auf leitende Materialien legen!

GPS 7.11.90 Wkr.

GPS 11.1.91 WM.

Einbau C85RESET in Collamat C85

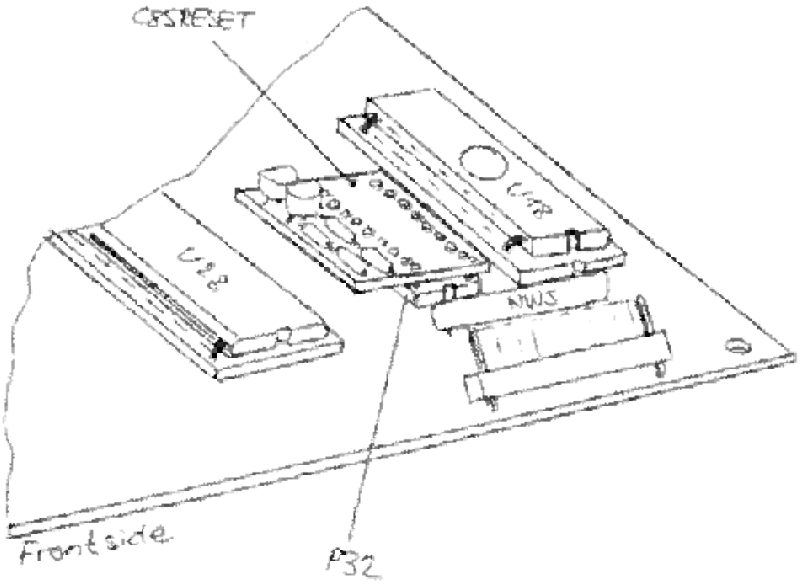

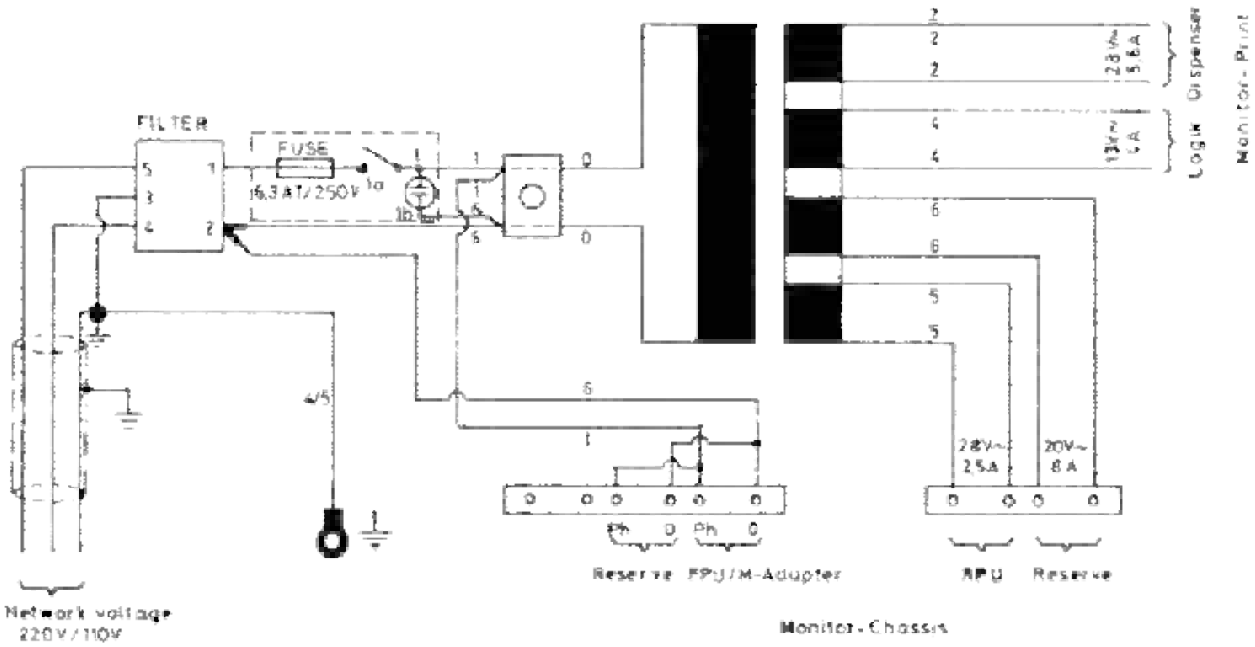

Stück	Gegenstand	Pos.	Werkstoff	Dimension
Netzteil				3.7.75 RU
Titel			Freimasstoleranzen	Gezeichnet
Monitor				Geprüft
Sachgruppe			Maßstab	Gesehen
C85				
Untergruppe			Ersatz für	Ersetzt durch
GS	Guhl + Scheibler AG, Aesch		2/50/2	–421

Lehren | Änderungen

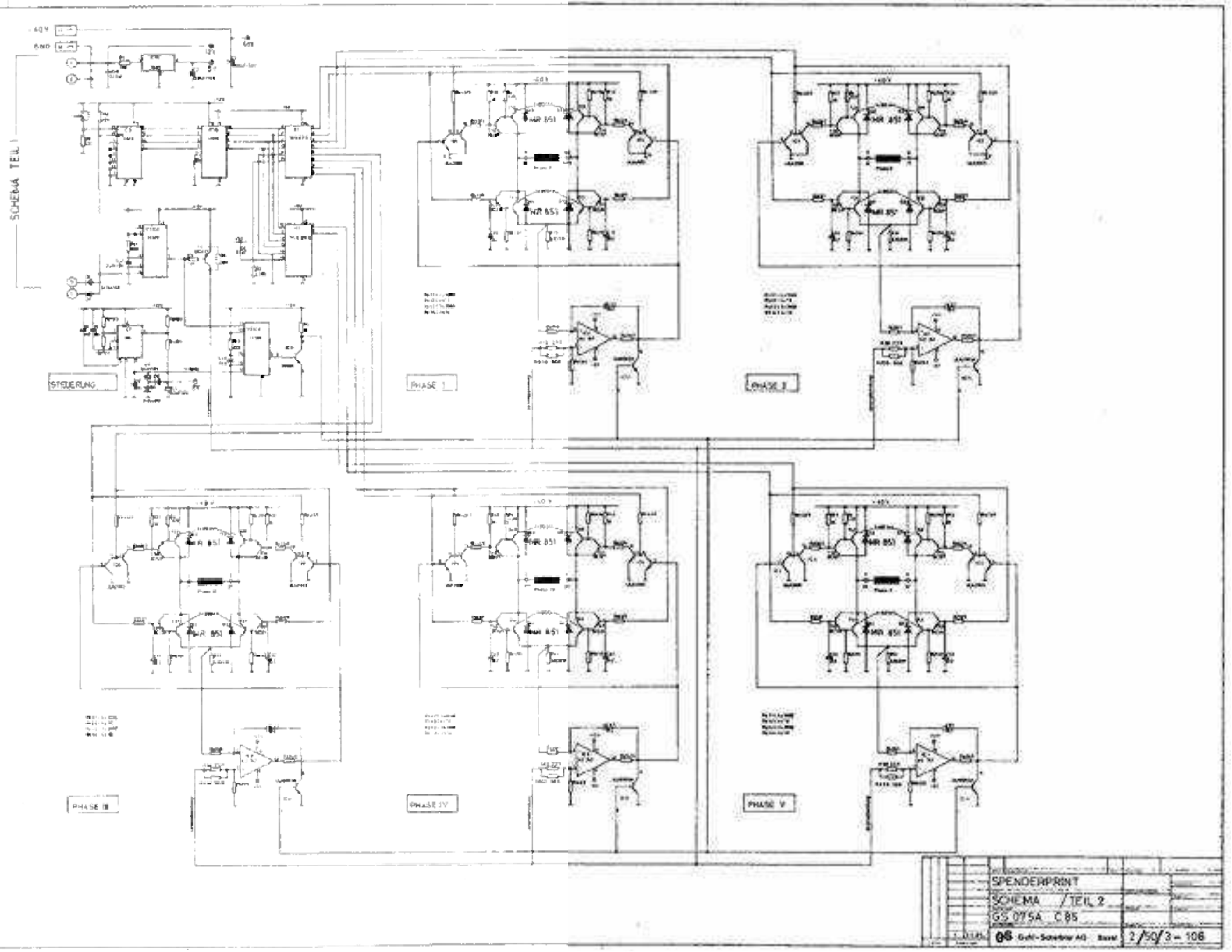
SCHEMA TEIL 1
STEUERUNG
PHASE I
PHASE II
PHASE III
PHASE IV
PHASE V
SPENDERPRINT
SCHEMA / TEIL 2
GS 075A C 85
2/50/3 – 106

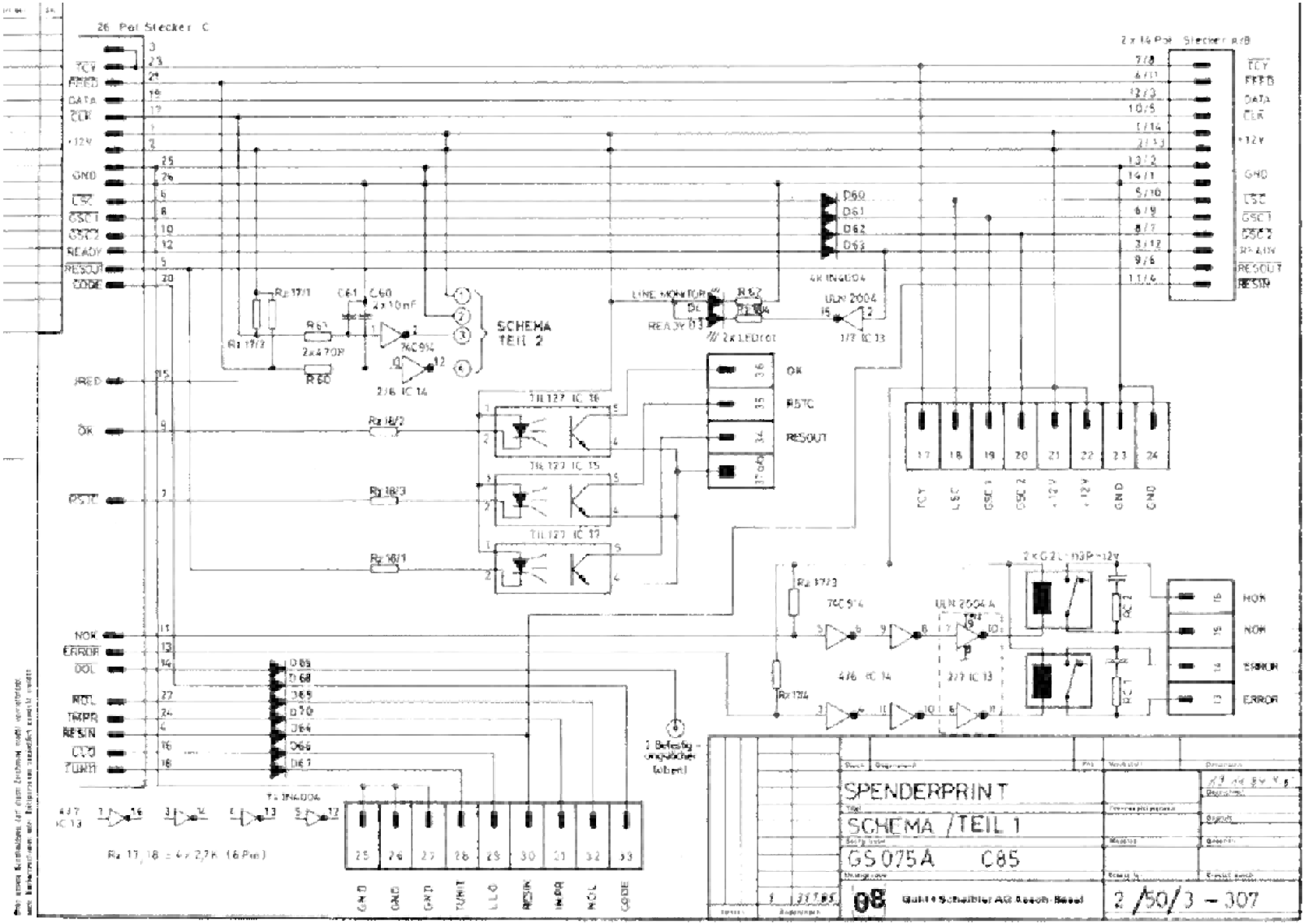
26 Pol Stecker C
2 x 14 Pol Stecker A/B
TCY
FEED
DATA
CLK
+12V
GND
LSC
GSC1
GSC2
READY
RESOUT
CODE
RESIN
JRED
OK
RSTC
NOK
ERROR
DOL
NOL
TMPR
RESIN
CLO
TUNIT
SCHEMA TEIL 2
LINE MONITOR
READY
2x LED rot
ULN 2004
4x IN4004
TIL127 IC 16
TIL127 IC 15
TIL127 IC 17
74C914
2/6 IC 14
2/7 IC 13
4/6 IC 14
2 Befestigungsöhrchen (oben)
Rz 17/1
Rz 17/2
Rz 17/3
Rz 17/4
Rz 18/1
Rz 18/2
Rz 18/3
Rz 17, 18 = 4 x 2,7K (6 Pin)
SPENDERPRINT
SCHEMA /TEIL 1
GS 075A C85
08
Gulf + Schweizer AG Aesch-Basel
2 /50/3 - 307

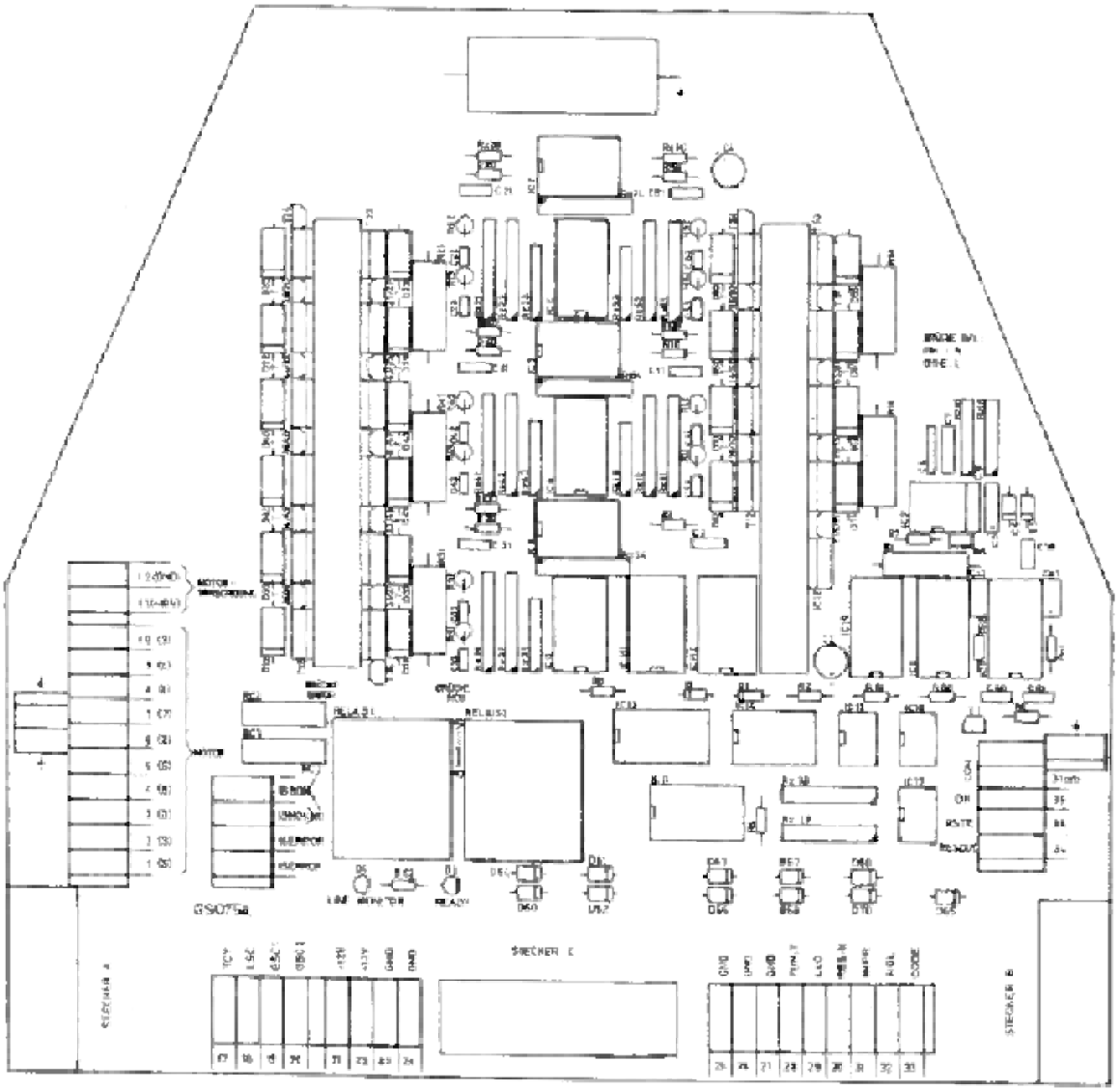

Spenderprint

Bestückungsplan

GS 075A

DWN / Schneider AG

2/30/3 - 105

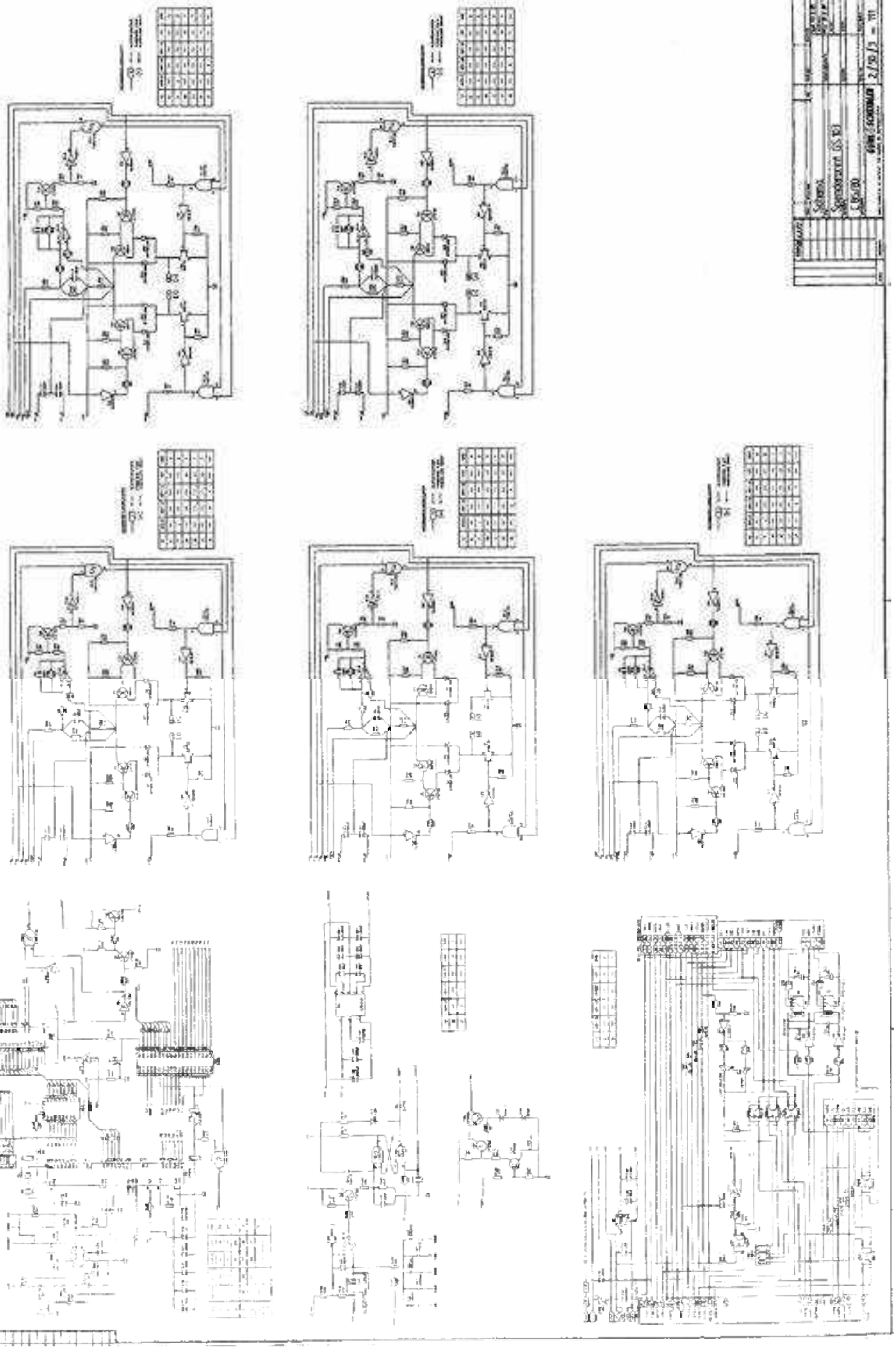

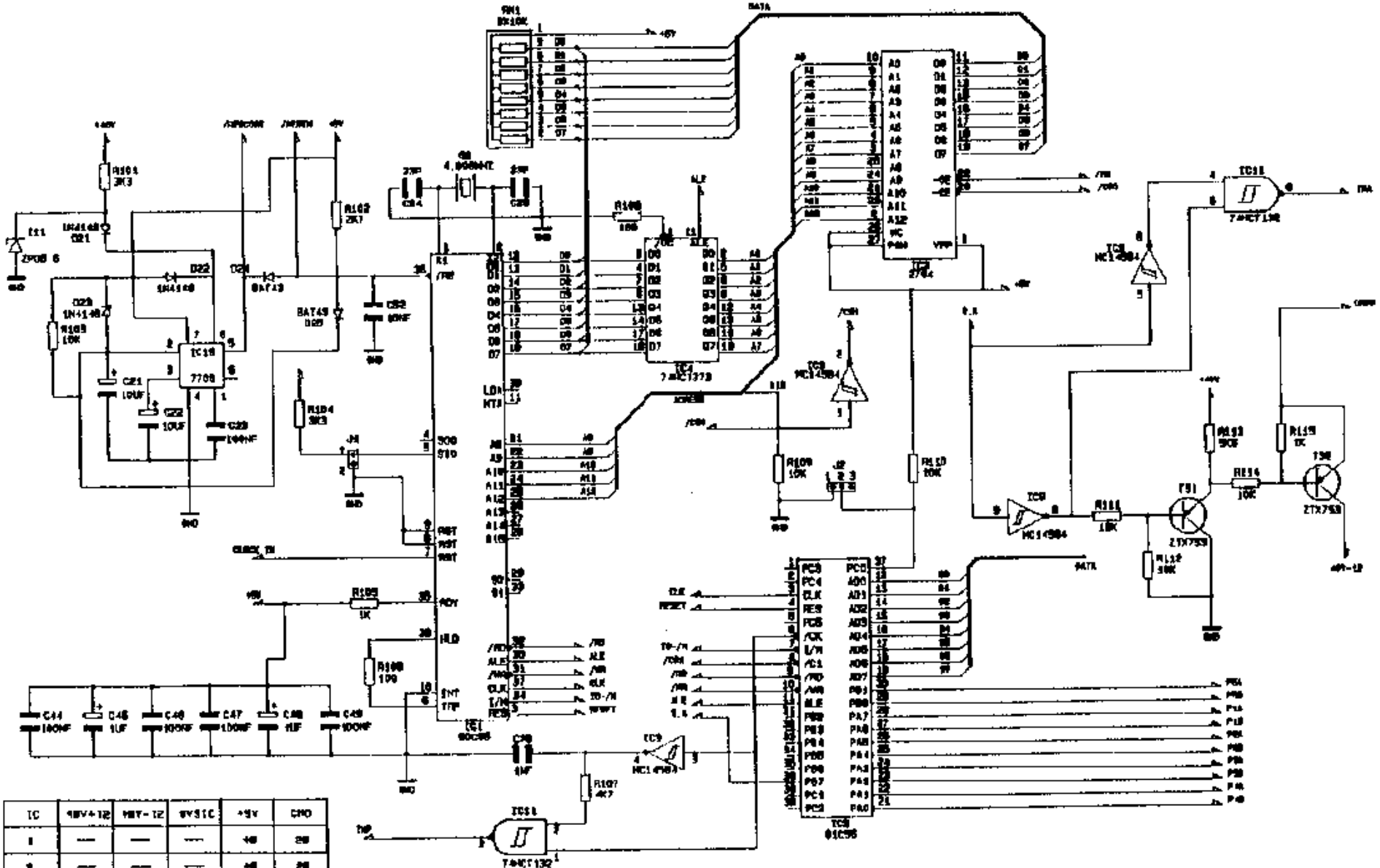

IC	+8V+12	+8V-12	8V5IC	+5V	GND
1	—	—	—	40	20
2	—	—	—	40	20
3	—	—	—	20	11
4	—	—	—	20	10
5	—	—	—	14	7
13	—	—	—	14	7
18					

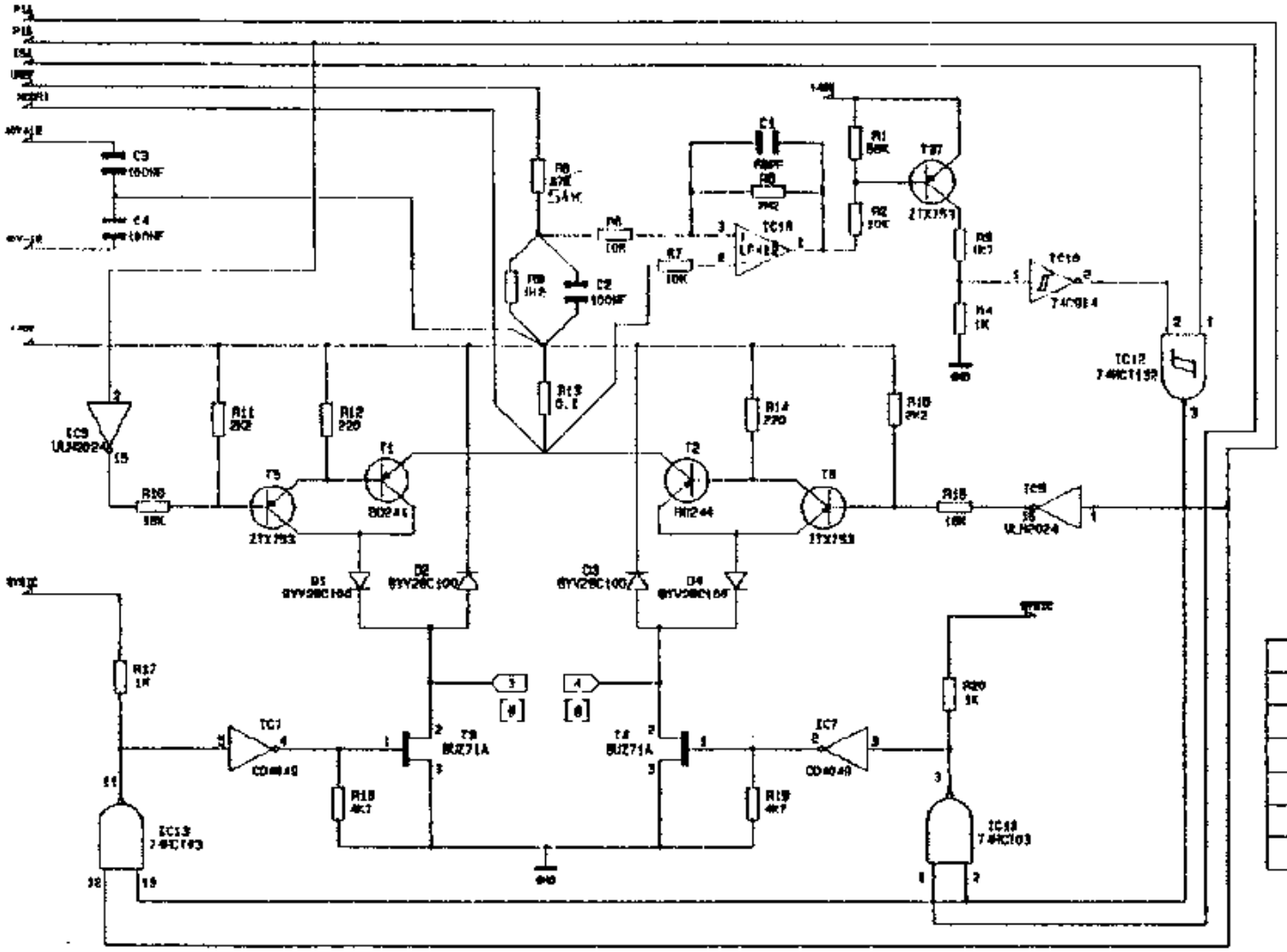

IC	SYSIC	+8V+12	+8V-12	+5V	GND
6	—	—	—	—	8
7	1	—	—	—	8
10	—	—	—	14	7
12	—	—	—	14	7
13	—	—	—	14	7
16	—	8	1	—	—

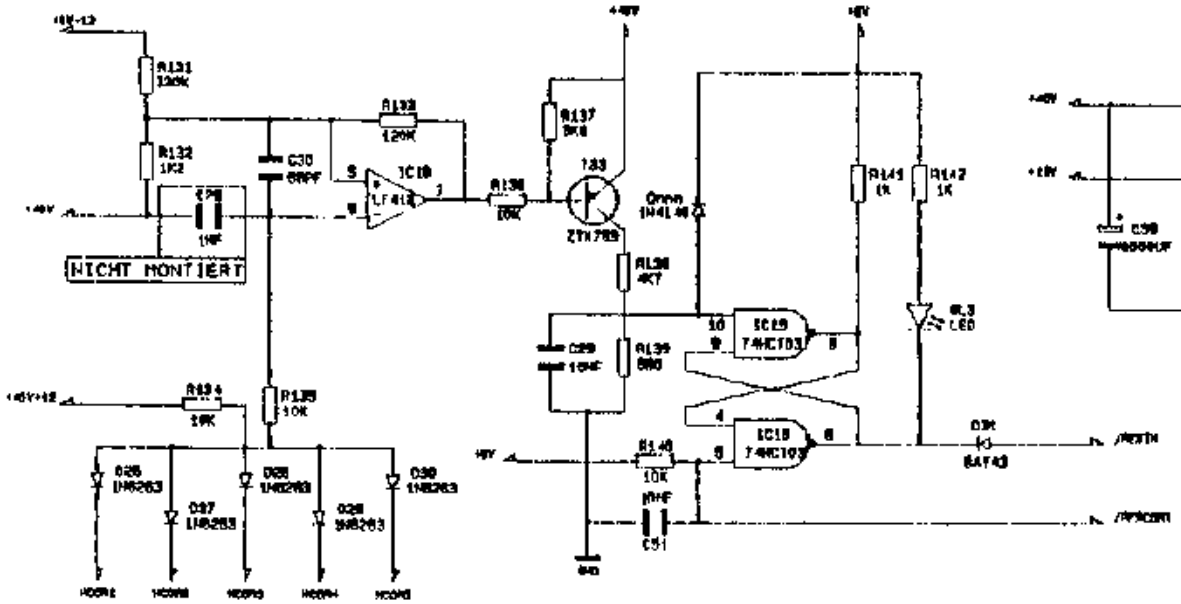

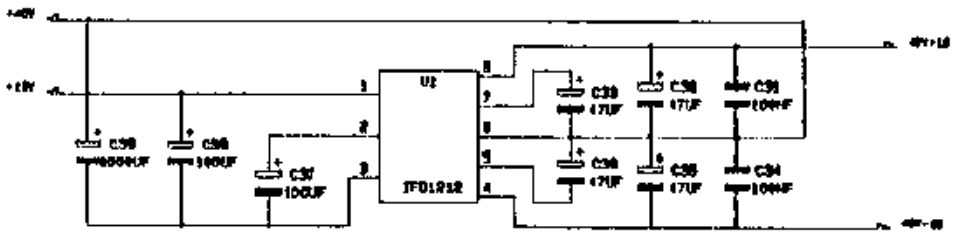

IC	+8V+12	+8V-12	5VSIC	+5V	GND
15	—	—	—	11	7
16	8	4	—	—	—

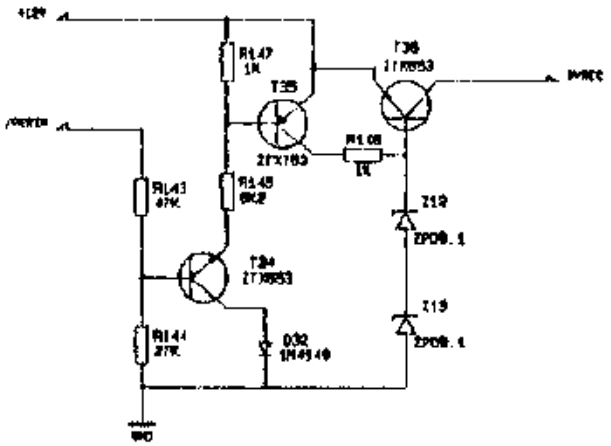

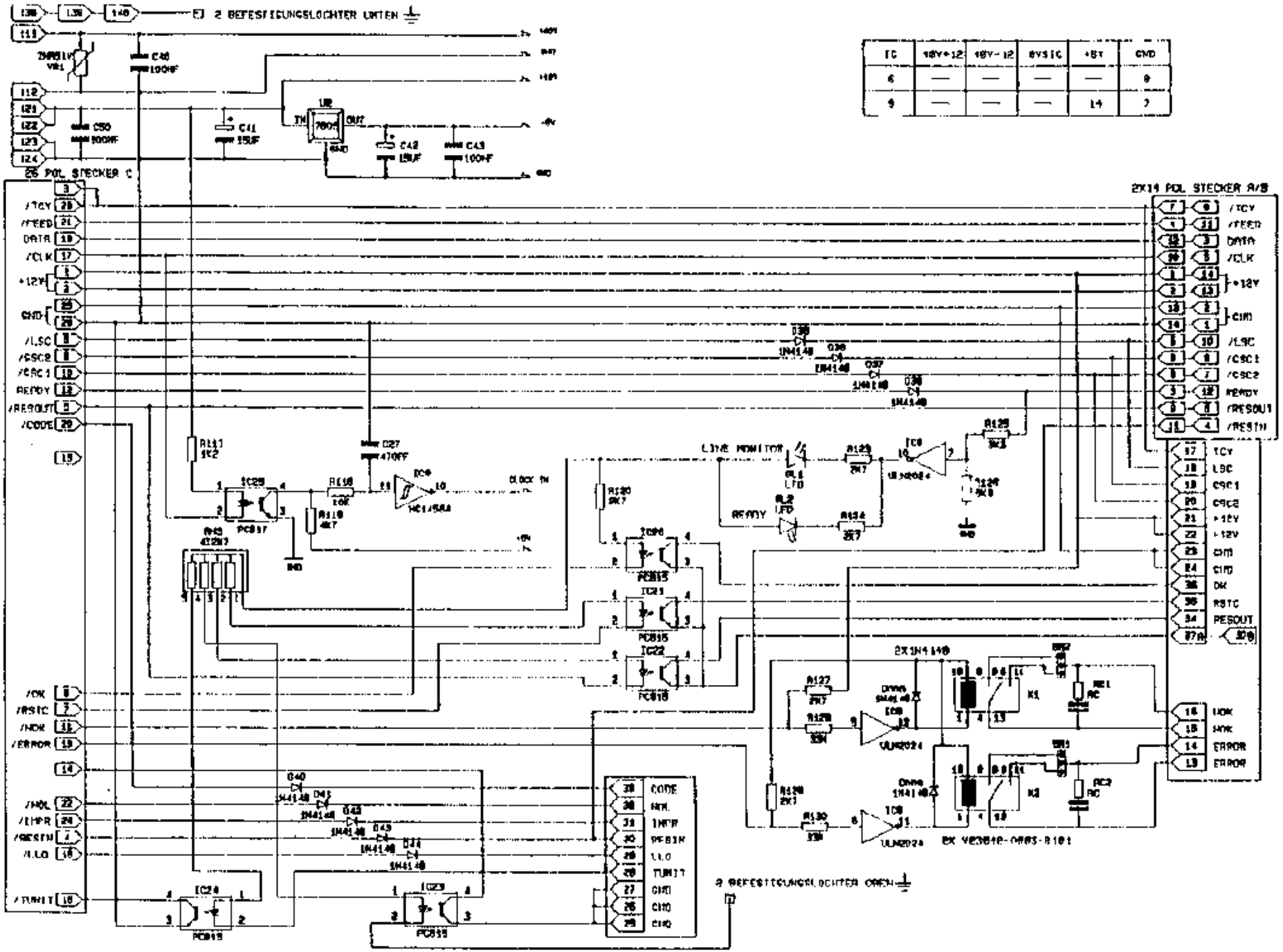

IC	+8V+12	+8V-12	8VSIC	+5V	GND
6	—	—	—	—	9
9	—	—	—	14	7

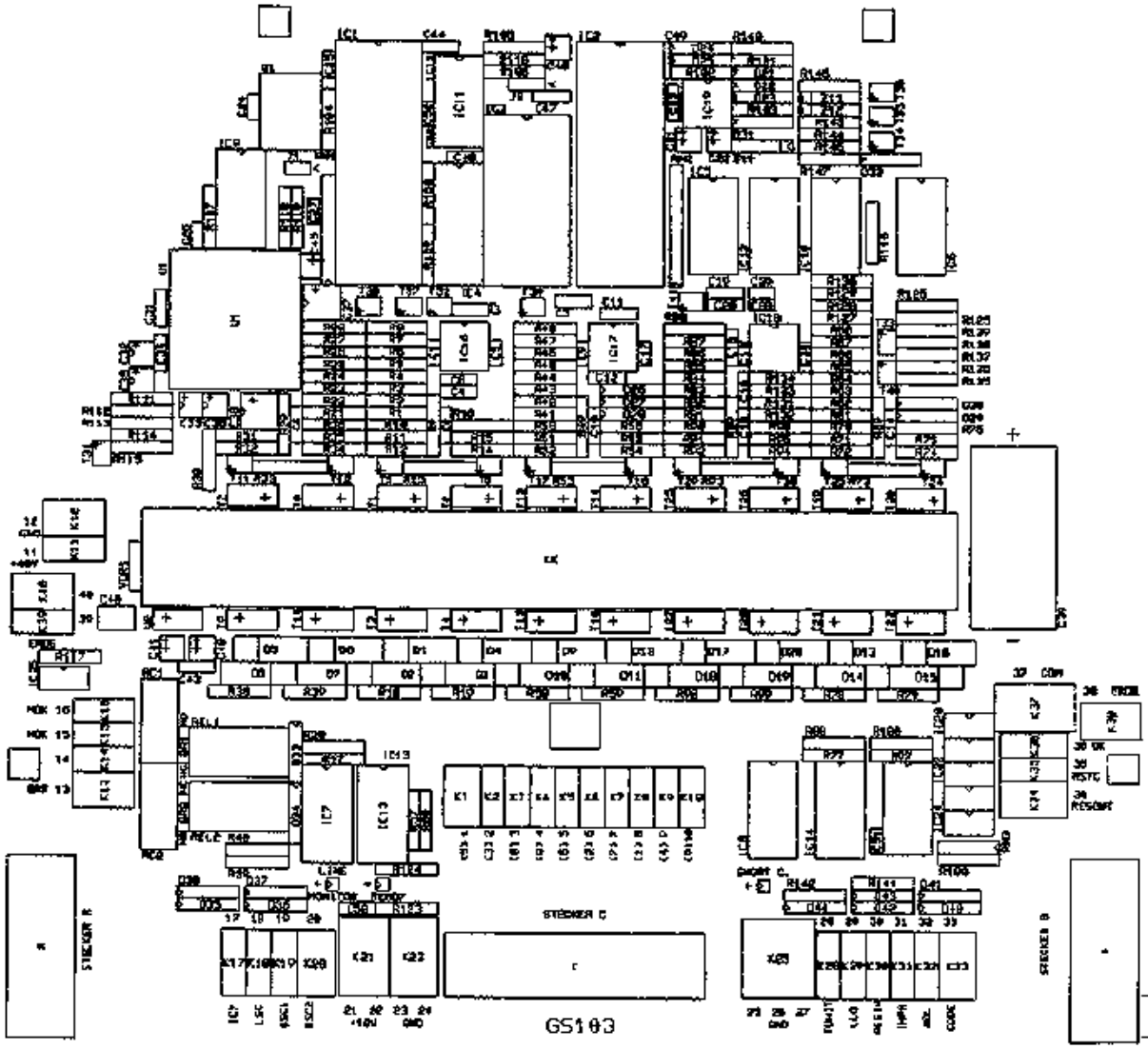

int - V03 1/48 2011
v-87 [PL+1]

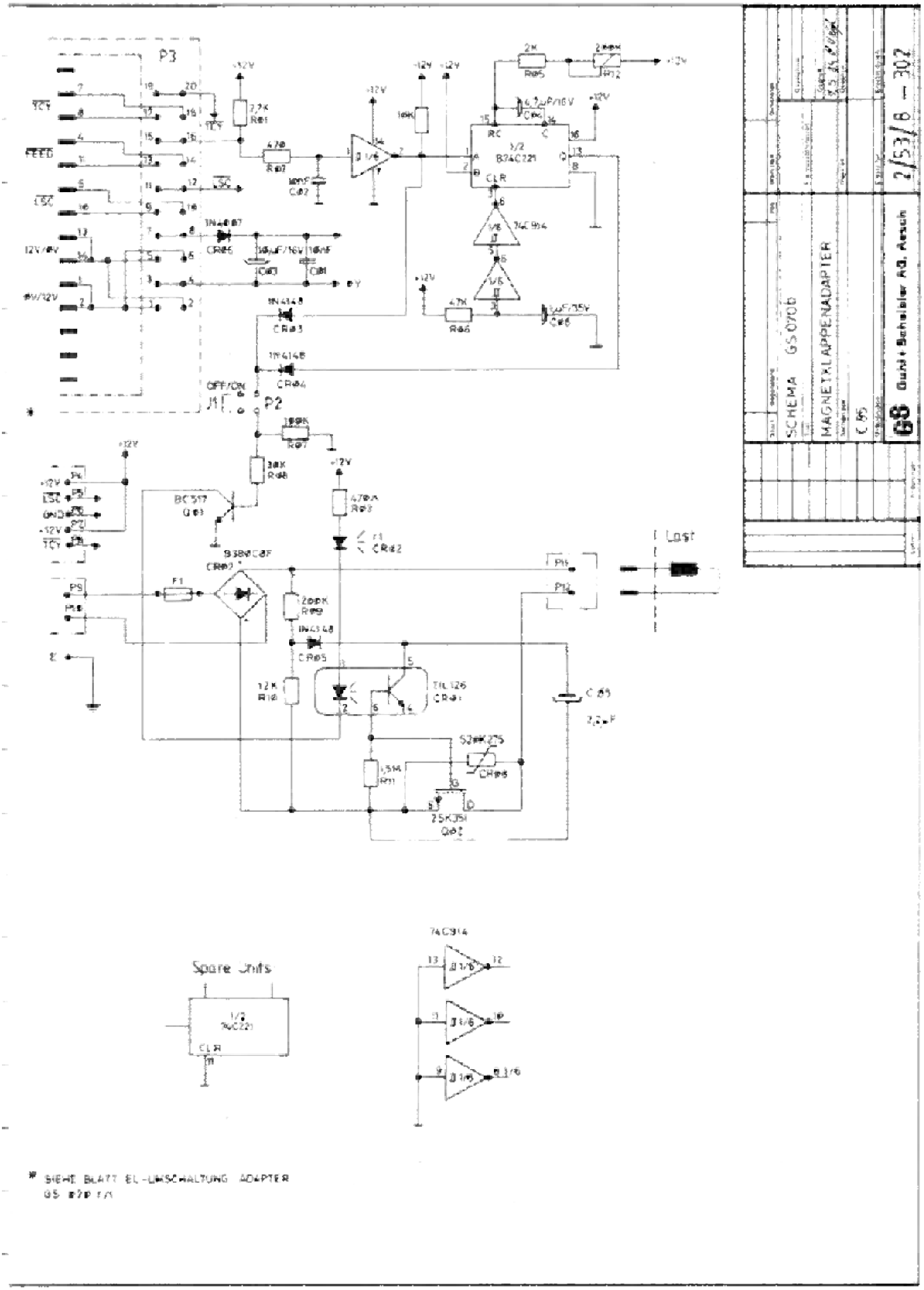

* SIEHE BLATT EL-UMSCHALTUNG ADAPTER
GS 070 F/1

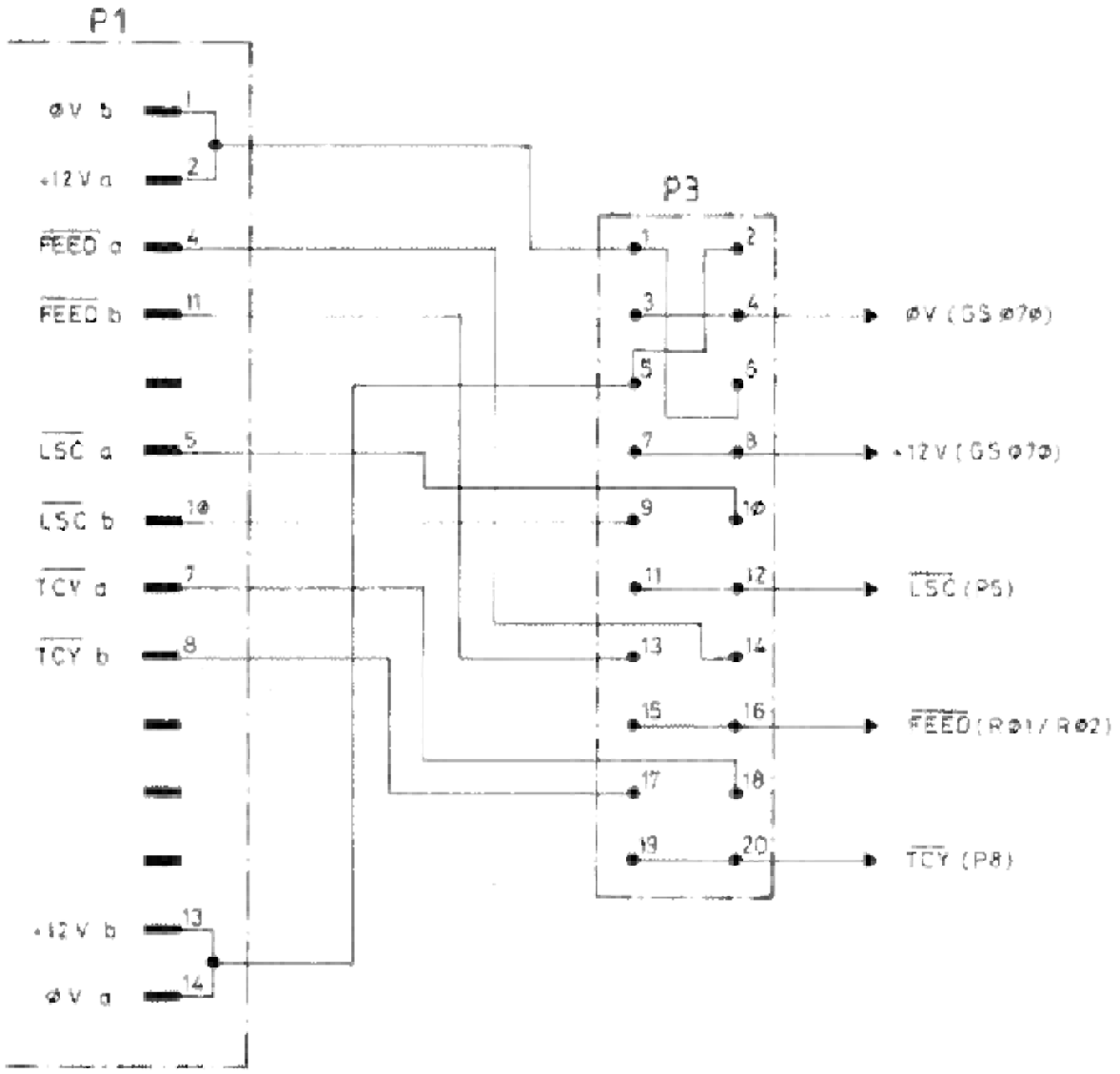

EL.-UMSCHALTUNG

Materiale	Art. o Modello	Fornitore	Sostituisce	Sostituito da
MAGNETKLAPPENADAPTER			Dis.	
			Contr.	
GS 070 b	C 85		Norm.	
			Scala	

Modifica	Tipo	Gruppo

GS Guhl + Scheibler AG, Aesch

2/53/8 – 403

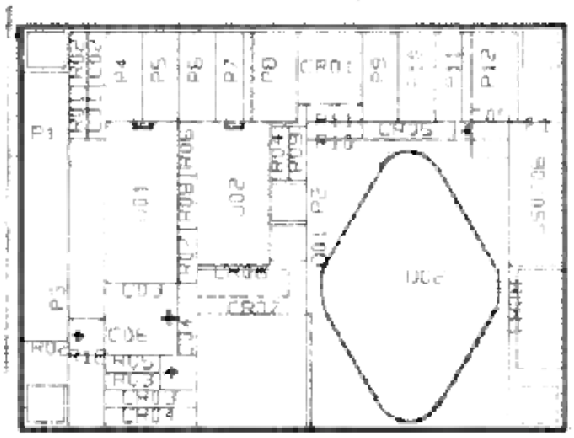

Stück	Gegenstand	Pos.	Werkstoff	Dimension
	MAGNET ADAPTER			13.11.84 [illegible]
	Titel		Freimaßtoleranzen	Gezeichnet
	BESTUCKUNGSPLAN			Geprüft
	Sachgruppe		Maßstab	Gesehen
	GS 070B			
	Untergruppe		Ersatz für	Ersetzt durch
	GS Guhl + Scheibler AG Aesch-Basel		2/53/8 - 405	

Lehren | Änderungen

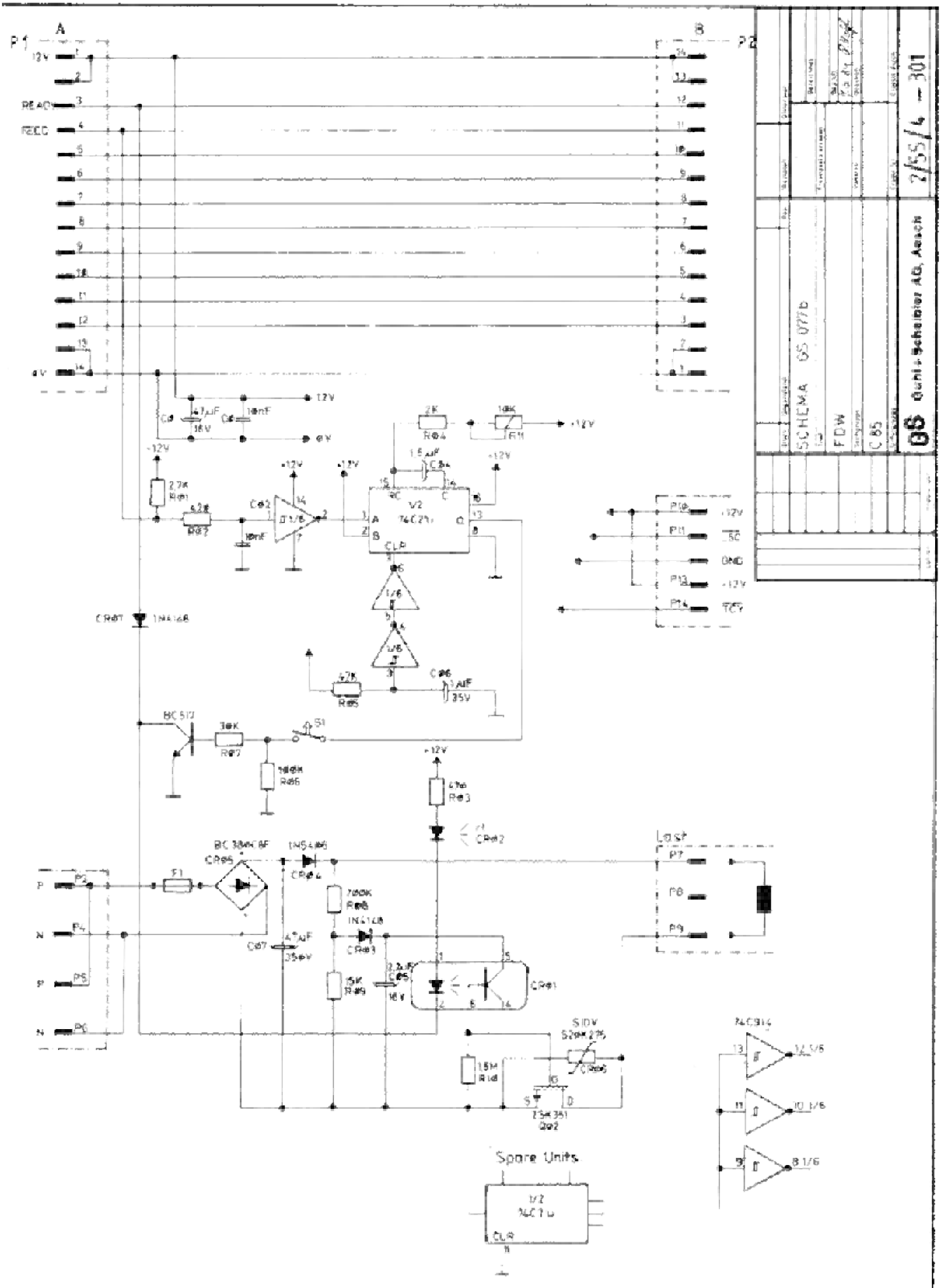

A
B
P1
P2
12V
READY
FEED
0V
+12V
-12V
C0
47µF
16V
10nF
2K
R04
10K
R11
1.5µF
C04
2.7K
R01
4.2K
R02
C02
1/6
V2
74C21
CLR
P10
P11
P13
P14
GND
TCY
CR07
1N4148
47K
R05
C06
1µF
35V
BC512
30K
R07
S1
100K
R06
47K
R03
CR02
BC380C8F
CR05
1N5406
CR04
F1
P3
P4
P5
P6
P
N
P7
P8
P9
Last
700K
R08
1N4148
CR03
C07
47µF
350V
15K
R09
2.2µF
C05
16V
CR01
S10V
S20K275
CR06
1.5M
R10
ZSK351
Q02
74C914
12 1/6
10 1/6
8 1/6
Spare Units
1/2
74C7u
CLR
SCHEMA GS 077b
FDW
C85
GS Guhl-Scheibler AG, Aesch
2/55/4 — 301

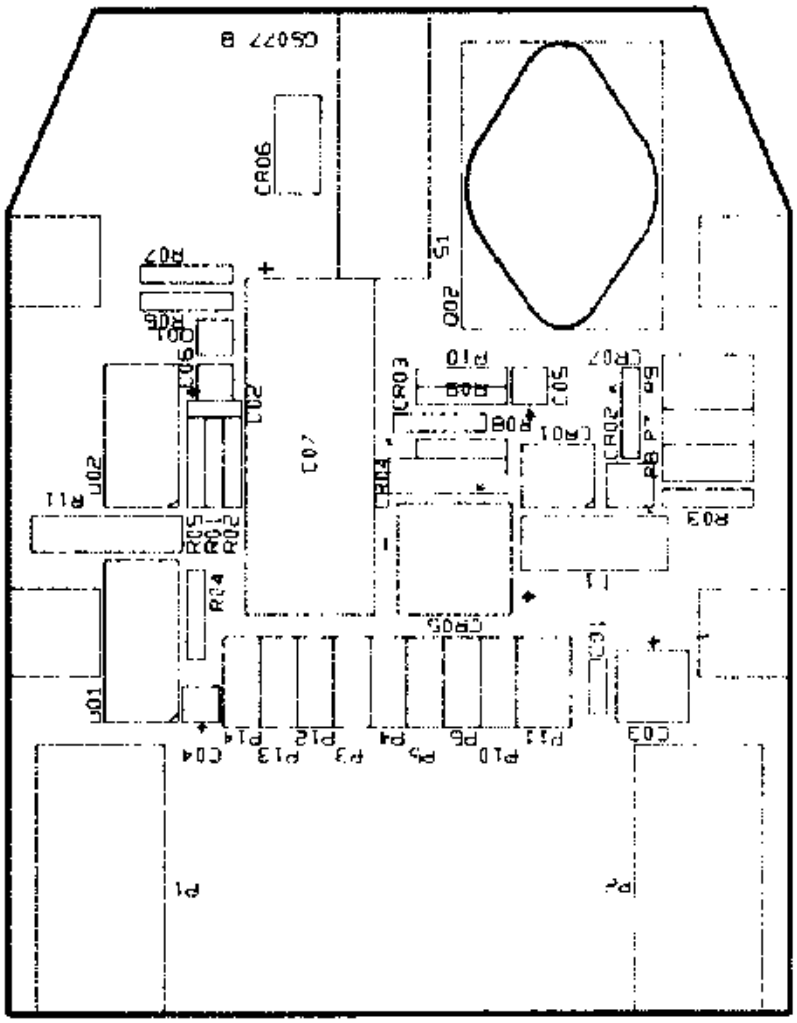

Stück	Gegenstand	Pos.	Werkstoff	Dimension
	FLACHDRUCKWERK			13.11.84 Hug. Gezeichnet
	Titel: BESTUCKUNGSPLAN		Freimasstoleranzen	Geprüft
	Sachgruppe: GS 077B		Massstab	Genehmigt
	Untergruppe		Ersatz für	Ersetzt durch
	GS Guhl + Scheibler AG Aesch-Basel		2/55/4 - 402	

Lesen | Änderungen

Ohne unsere ausdrückliche Genehmigung darf diese Zeichnung weder vervielfältigt noch Konkurrenzfirmen oder Unbefugten zugänglich gemacht werden

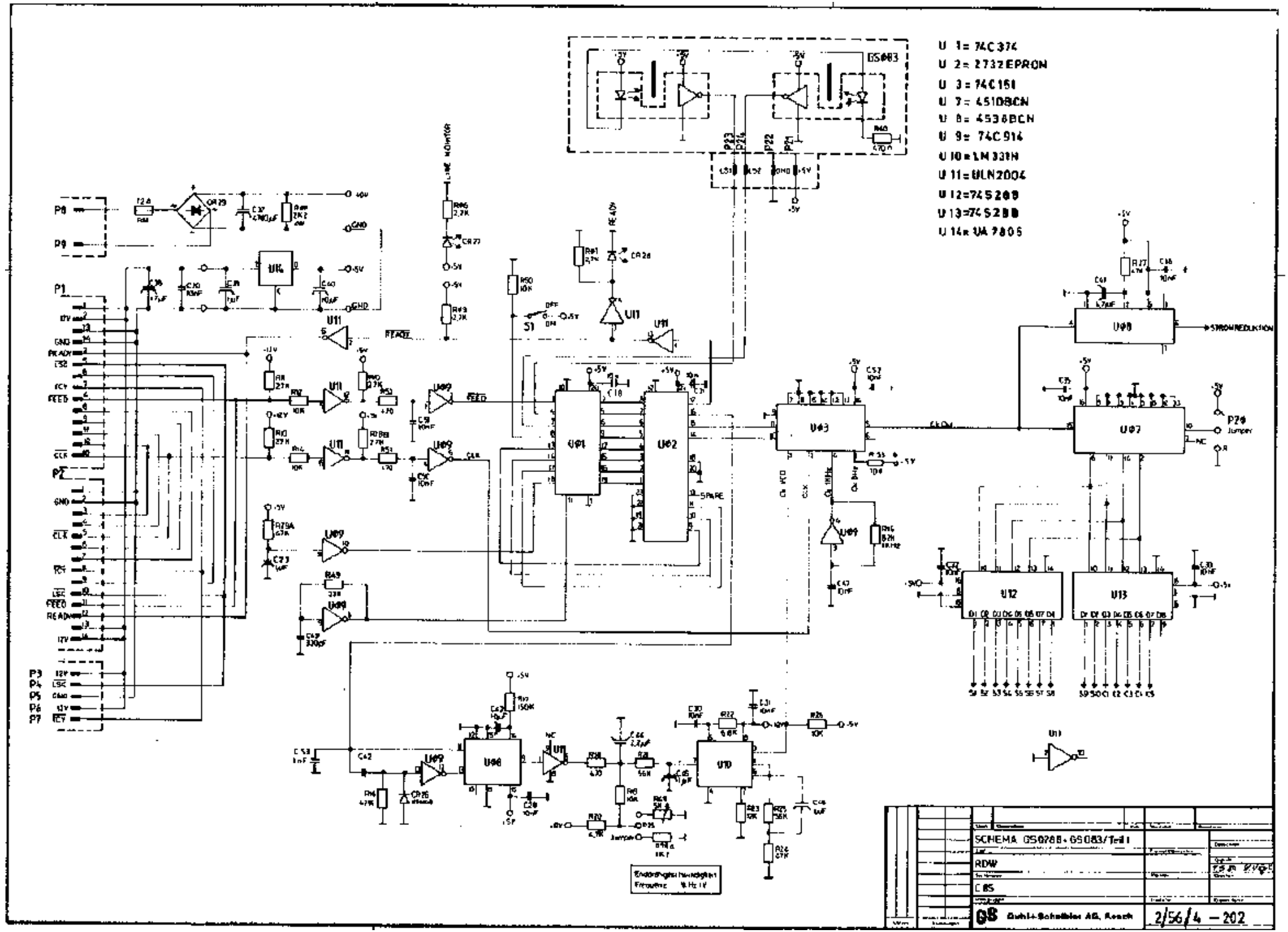
U 1= 74C374
U 2= 2732EPROM
U 3= 74C151
U 7= 4510BCN
U 8= 4538BCN
U 9= 74C914
U 10= LM331N
U 11= ULN2004
U 12= 74S288
U 13= 74S288
U 14= UA7805
GS083
STROMREDUKTION
SPARE
LINE MONITOR
READY
FEED
CLK
SCHEMA GS0288+GS083/Teil I
RDW
C 85
GS Guhl+Schaibler AG, Aesch
2/56/4 – 202

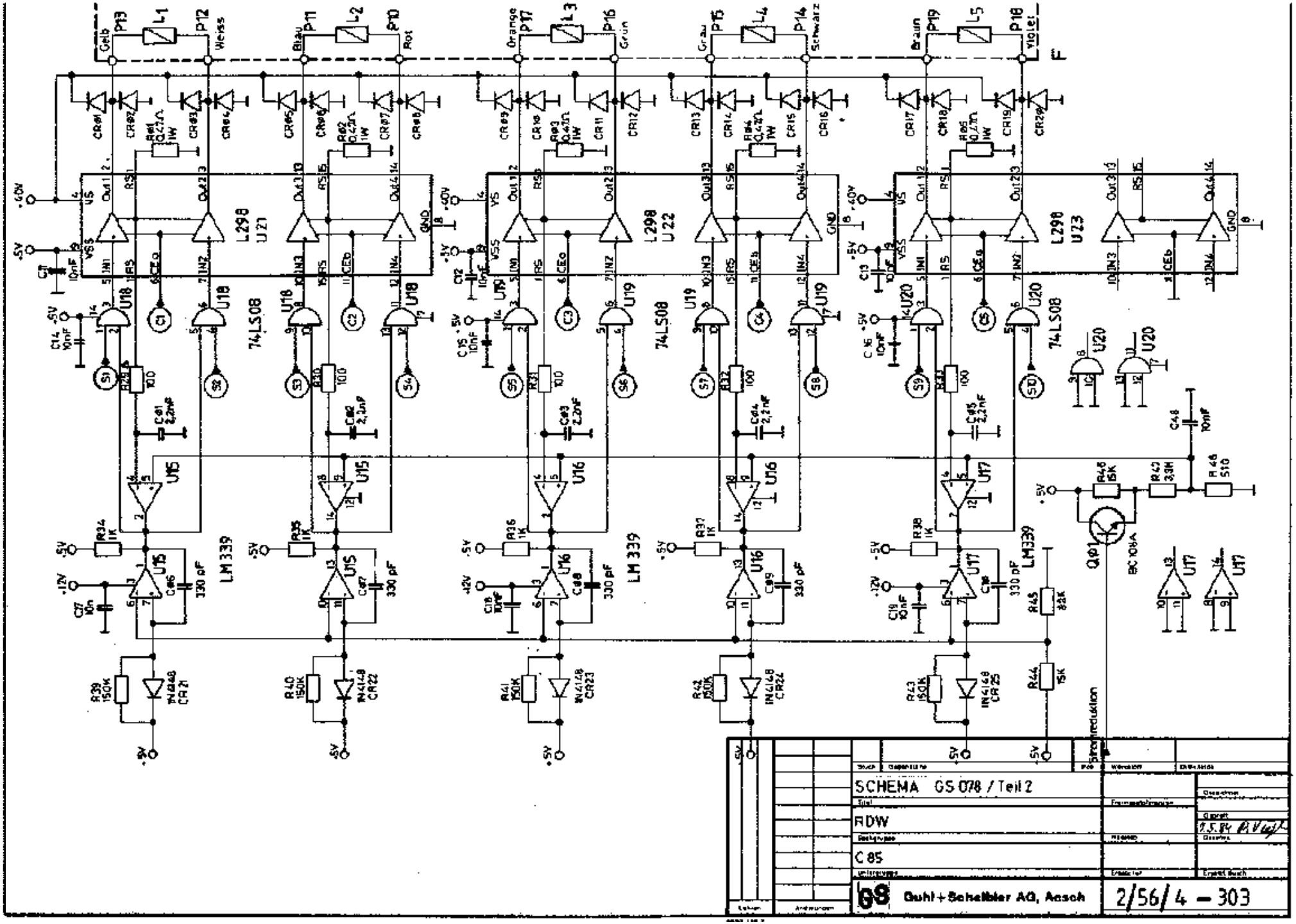

Gelb
Weiss
Blau
Rot
Orange
Grün
Grau
Schwarz
Braun
Violet
L298
U21
U22
U23
74LS08
LM339
BC108A
Stromreduktion
SCHEMA GS 078 / Teil 2
RDW
C 85
Guhl + Scheibler AG, Aesch
2/56/4 – 303

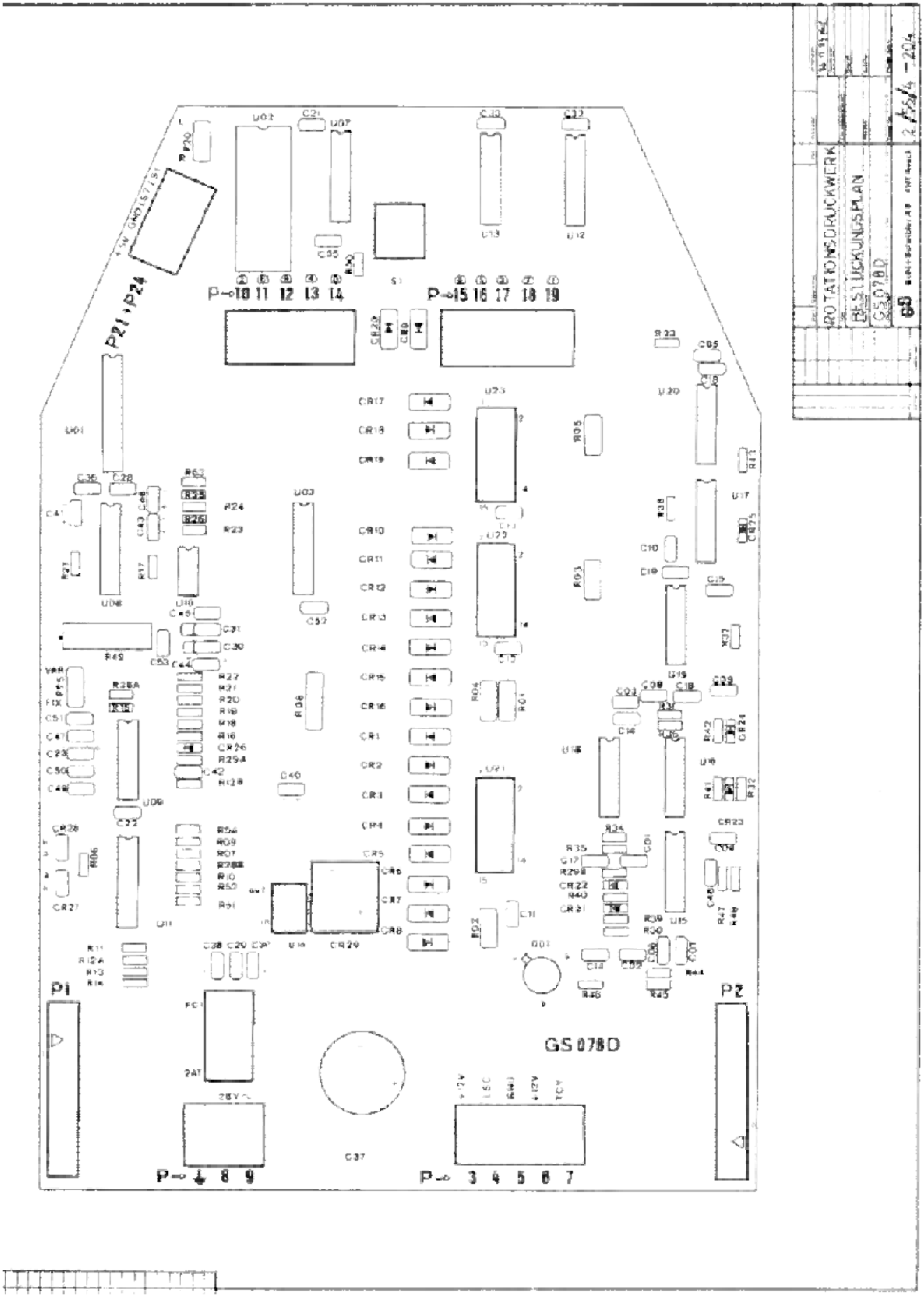
ROTATIONSDRUCKWERK
BESTÜCKUNGSPLAN
GS078D
P21 + P24
P1
P2
GS 078D
P 10 11 12 13 14
P 15 16 17 18 19
P 1 8 9
P 3 4 5 6 7